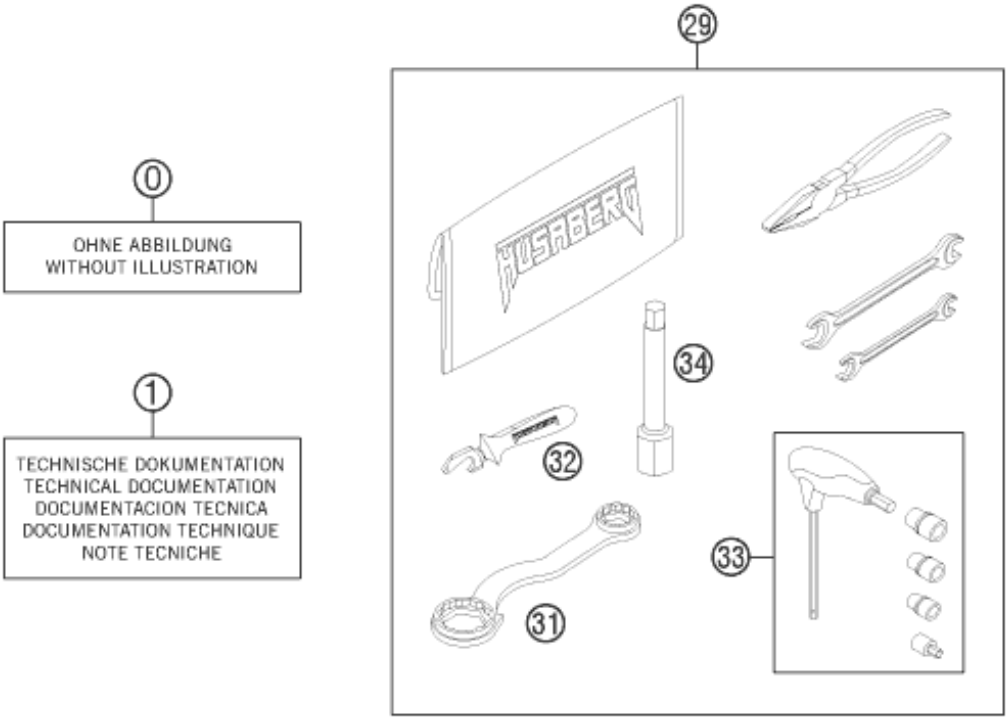

Pos	Part Number	Description	Additional Text	Quantity
0	81206016100	FILTER SUPPORT WITH SIEVE		1.00
0	58012040000	Rear view mirror left		1.00
0	58012140000	Rear view mirror right		1.00
0	58012040150	Clamp for mirror		1.00
0	50302044000	CLAMP FOR MIRROR CPL. 09		1.00
0	58412080000	REFLECTOR RED	EU+AUS	1.00
0	58412080050	BRACKET FOR REFLECTOR		1.00
0	0966050203	OVAL HEAD SCREW DIN0966-M 5X20		2.00
0	40006006000	WASHER 6MM		2.00
0	0125050003	WASHER DIN0125-A 5,3		3.00
0	0985050003	Self locking nut DIN 985 M5		2.00
0	5030314013390	FOOTPEG L.+R. CPL. 03		1.00
0	58310151052	REAR SPROCKET 52-T		1.00
0	0019080266S	COUNTER-SUNK SCREW ISA45 M8X26	ONLY FOR 78003023081	6.00
0	0019080206S	FLAT HEAD SCREW M. ISA45 M8X20		2.00
0	78010165118	CHAIN DID 118 ROLLS		1.00
0	81202002144	BAR PAD CPL.		1.00
0	81203190000	ENGINE GUARD		1.00
0	0912050063	AH SCREW DIN 912 M 5X6		1.00
0	0025060356	HH collar screw M6x35 TX30		1.00
0	0021060003	Washer DIN9021-A 6.4	ONLY USA	1.00
0	81212002000	BAG HUSABERG		1.00
0	H38090110	HUSABERG BALLPOINT PEN		1.00
0	7810297900028	HANDGUARDS CPL.LE+RI WHITE 12		1.00
0	81203094000	FRAME PROTECTION SET		1.00
0	8120801000068C	FRONT FENDER BLUE 2012		1.00
0	77308010099	MOUNTING KIT FRONT FENDER		1.00
0	50308009050	SCREW FEND.BRACE M8X9 WS=17		1.00

0	50308009051	NUT FENDER BRACE M8 WS=17		1.00
0	00063004202	PRINT LABEL 60X51 MM		2.00
0	H38090009DE/GB	HUSABERG PARTS&WEAR POCKET 11		1.00
1	3802031EN	OWNERS MANUAL FE 390-570 2012		1.00
29	81229099000	TOOL SET 2009		1.00
31	50329080100	WRENCH SW=17/21/27/32 B&F		1.00
32	81229071000	OPENER HUSABERG		1.00
33	60029070200	T-WRENCH WS=6/8/10 TX=45 B&F		1.00
34	78029072000	Spark plug wrench		1.00