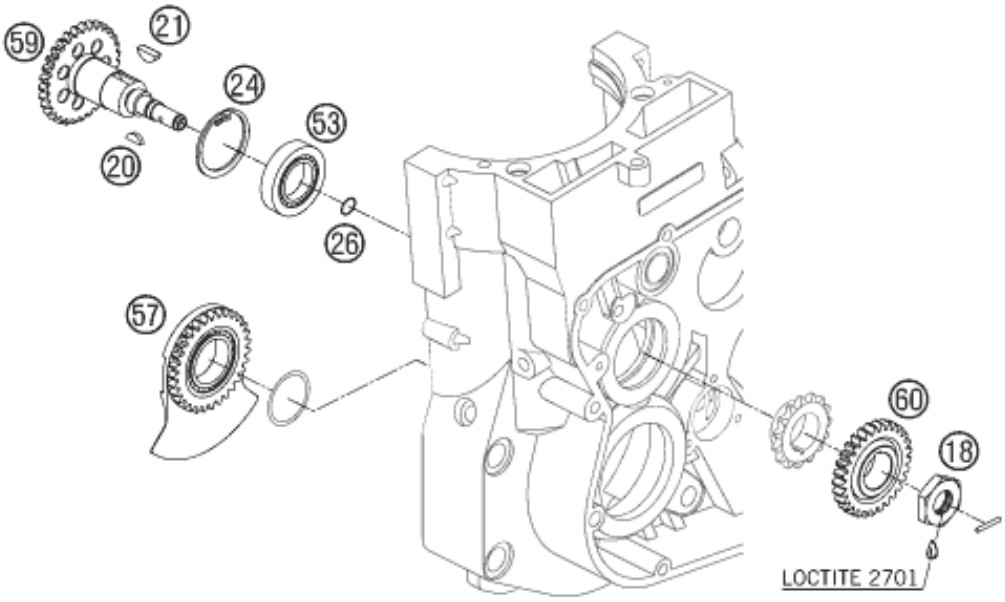

Pos	Part Number	Description	Additional Text	Quantity
18	80030018020	NUT M16X1 WS=30 03		1.00
20	0888030050	WOODRUFF KEY DIN6888-3X5X13		1.00
21	6946005	WOODRUFF KEY 5X6,5 HARDED		1.00
24	0472042175	CIRCLIP DIN0472-42X1,75		1.00
26	0770010012	O-RING 10, 00X1, 20 NBR		1.00
53	0625069050	BALL BEARING 6905 J1LLUC3		1.00
57	80030057100	BALANCER SHAFT CPL. 450-650 06		1.00
59	80030059000	MAIN SHAFT BALANCER SHAFT 03		1.00
60	80030059050	GEAR WHEEL B.SH.-SHAFT 29-T 03		1.00