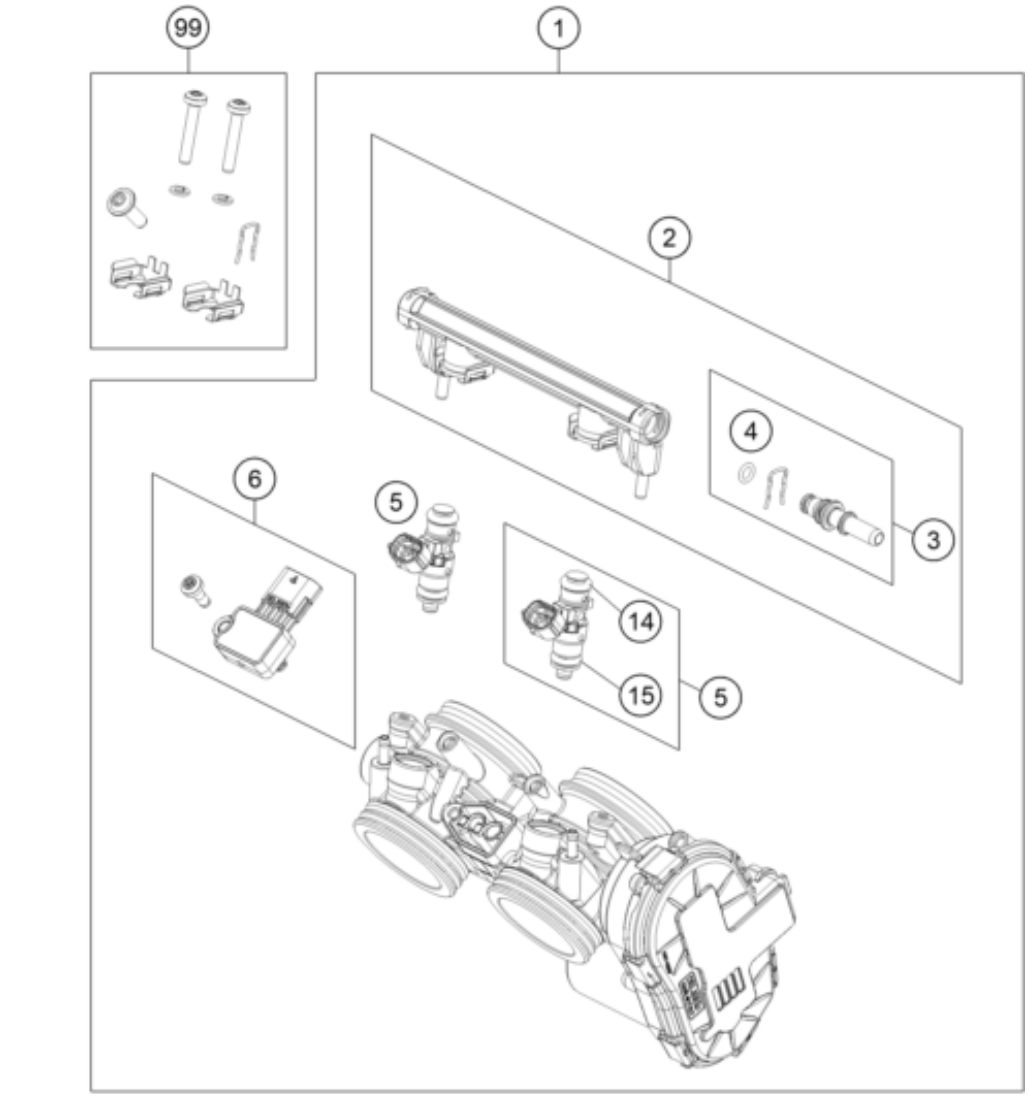

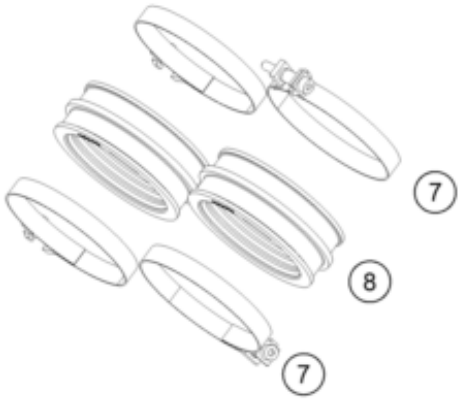

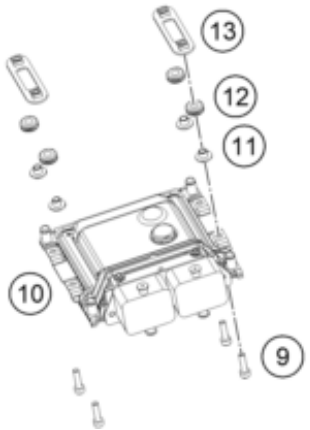

Pos	Part Number	Description	Additional Text	Quantity
1	63641101000	Throttle body		1.00
2	63541113050	Fuel line		1.00
3	63541113044	Fuel connection compl.		1.00
4	63541013010	Square and dust seal		1.00
5	63641023044	Injektor		2.00
6	63641085044	MAP sensor, cmpl.		1.00
7	61236048000	hose clamp Gemi 66		4.00

8	63536044000	Intake Sleeve		2.00
9	0912040163S	AH screw DIN0912 M4x16 self-lo		4.00
10	A60741031000	EFI control unit		1.00
11	64141030010	Collar Bushing 4.5x6x12x6.3		4.00
12	64141030000	Rubber grommet control unit		4.00
13	64141029000	Mounting Bracket ECU cpl.		2.00
14	55641023020	O-ring		2.00
15	55641023010	O-ring		2.00
99	63641099000	Smallpart kit		1.00