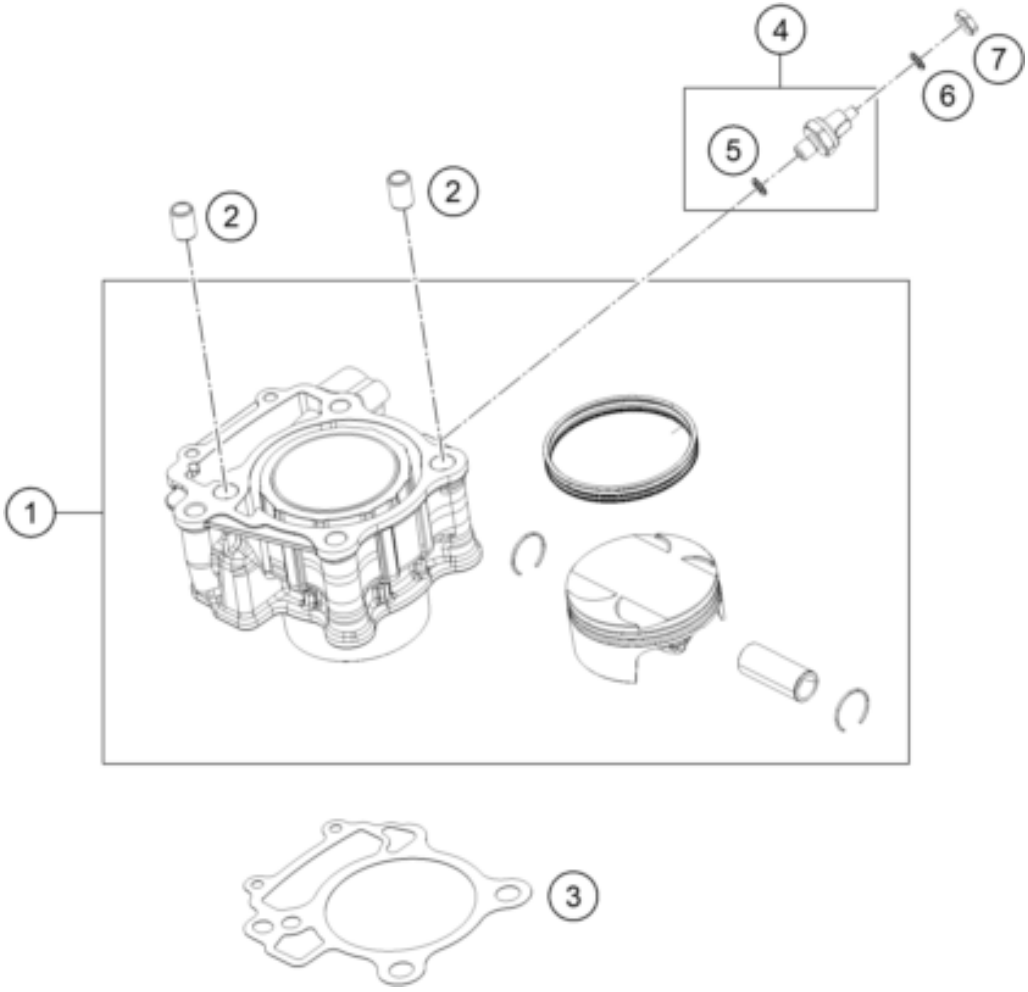

Pos	Part Number	Description	Additional Text	Quantity
1	96230038000C1	Cylinder + Piston cpl. 250		1.00
2	90130003007	DOWEL D14		2.00
3	96230035000	gasket block cylinder		1.00
4	90138091000	OIL PRESSURE SENSOR		1.00
5	90138091001	O-RING		1.00
6	J127060001	Spring ring B6		1.00
7	J926060000	FLANGED NUT M6 WS10 SELF LOCK.		1.00