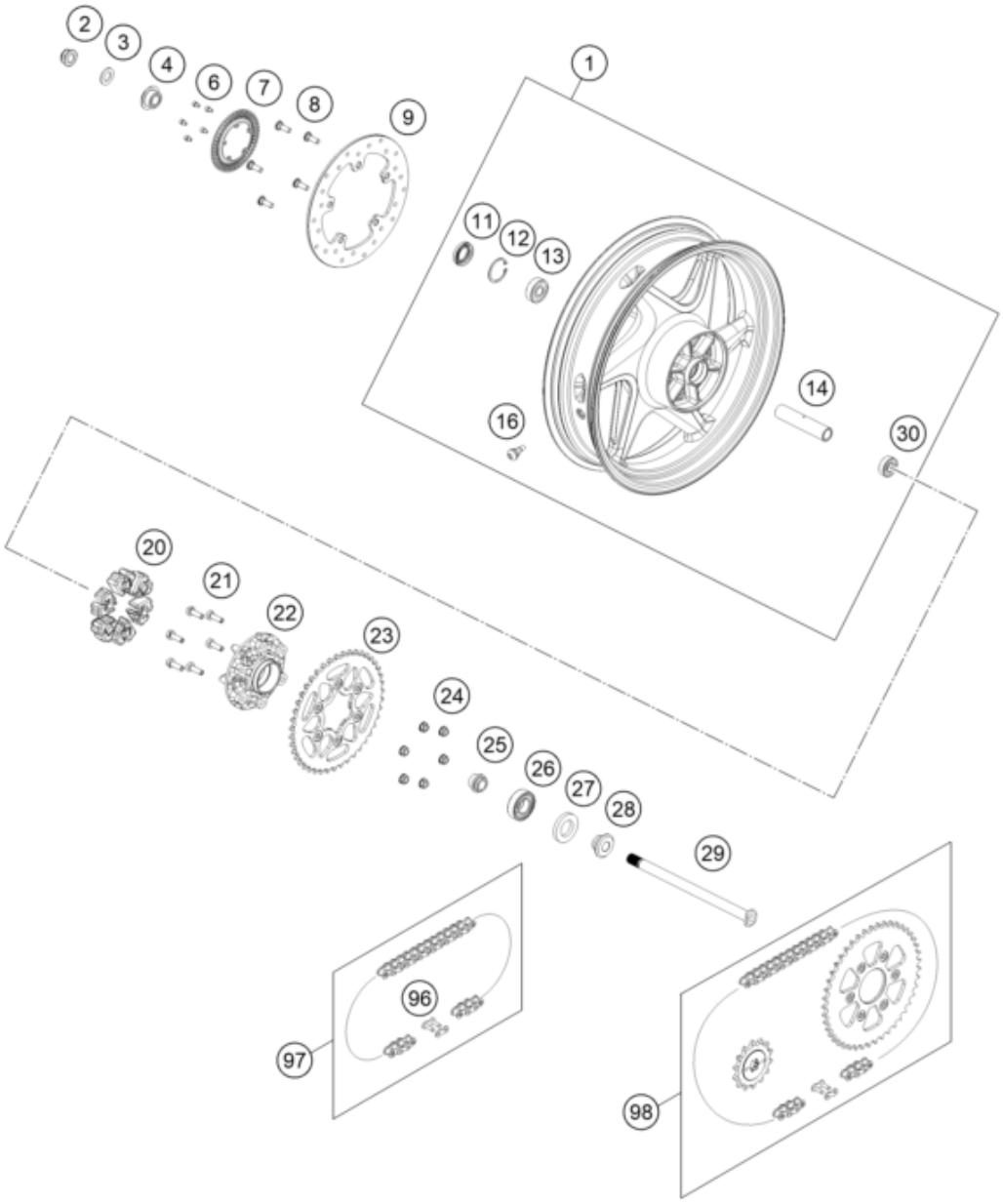

Pos	Part Number	Description	Additional Text	Quantity
1	A61610001044C1	Rear Wheel Assy. Black		1.00
2	96310086000	nut rear wheel axle		1.00
3	J690001700300	washer 17x2.6		1.00
4	J800001701700	collar		1.00
6	J900000500800	BOLT SOCKET M5X0.8		5.00
7	94542020000	Sensor wheel, front		1.00
8	90110062000	SPECIAL SCREW M8X25 SELF LOCK.		5.00
9	96310060000	DISC BRAKE DIA 240		1.00
11	J760304708	SHAFT SEAL RING 30X47X8		1.00
12	J710004717501	CIRCLIP 47X17		1.00
13	J410001701400	Ball bearing 17x47x14		1.00
14	A61710011000	COLLAR		1.00
16	90109076000	VALVE CPL.		1.00
20	90210059100	rear wheel dampening rubber		6.00
21	28110053000	Special screw M8x26 SS		6.00
22	28110050000	Rear sprocket carrier, spoke r		1.00

23	96310051043	rear sprocket 43T		1.00
24	90510052000	FLANGED NUT M8X1,25		6.00
25	A61710016000	SPACER		1.00
26	J625062050	BALL BEARING 6205		1.00
27	J760295207	SHAFT SEAL RING 29X52X7		1.00
28	96310011000	Rear wheel bushing		1.00
29	96310085000	rear wheel axle		1.00
30	J410001701200	Ball bearing		1.00
96	76910066000	Rivet link chain DID 520 VP2-T		0.00
97	76910065118	chain DID 118 roll		1.00
98	SPA214G433K118B	drivetrain kit 14Z/43Z		1.00