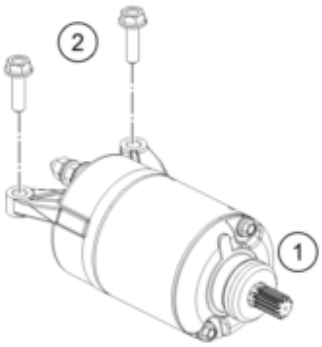

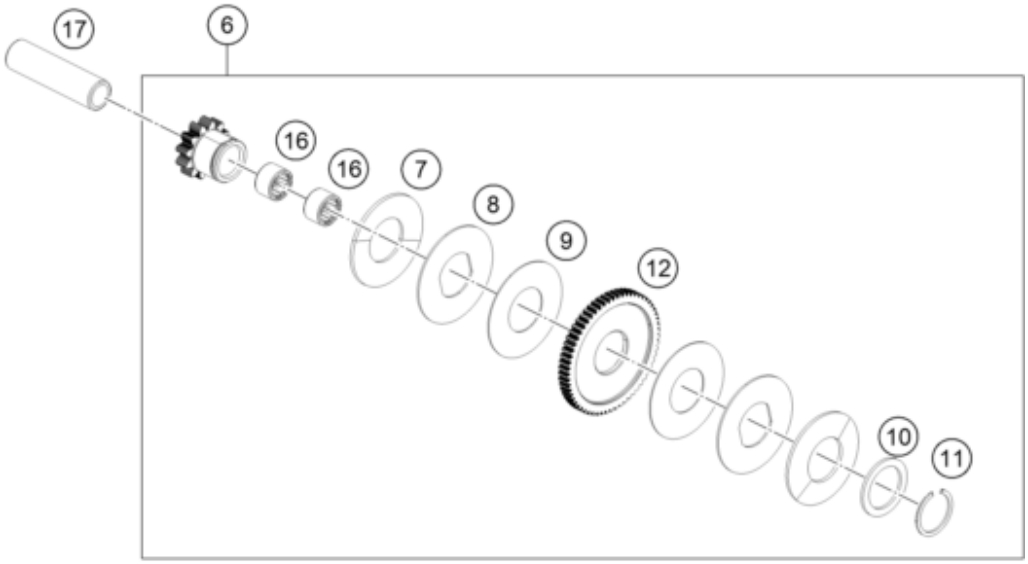

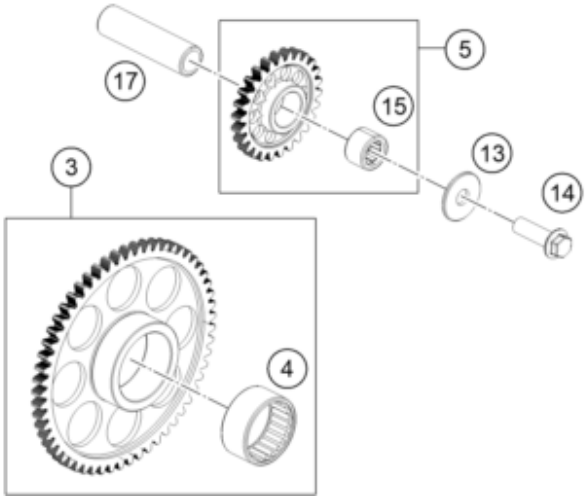

Pos	Part Number	Description	Additional Text	Quantity
1	96340001000	motor starter		1.00
2	J900000602203	BOLT FLANGED M6X1		2.00
3	96340020033	gear assembly clutch starter		1.00
4	J430002801600	BEARING NEEDLE ROLLER		1.00
5	96340022133	Starter idler gear cmpl.		1.00
6	96340016133	Torque limiter cmpl.		1.00
7	90240023006	CONICAL WASHER		2.00
8	90240023005	WASHER		2.00
9	90240023004	PAD FRICTION		2.00
10	J690002218000	SHIM 1.8 mm THK		0.00

10	J690002220000	SHIM 2.0 mm THK		0.00
10	J690002222000	SHIM 2.2 mm THK		0.00
10	J690002224000	SHIM 2.4 mm THK		0.00
10	J690002226000	SHIM 2.6 mm THK		0.00
10	J690002228000	SHIM 2.8 mm THK		0.00
11	J710002012000	RING SNAP INPUT		1.00
12	90240023002	GEAR STARTER COUNTER		1.00
13	J690000820000	WASHER PIVOT BOLT		1.00
14	J900000802504	bolt flanged M8x1.25		1.00
15	J430001201200	Needle bushing		1.00
16	90132050000	needle bearing		2.00
17	96340023000	SHAFT STARTER COUNTER		2.00