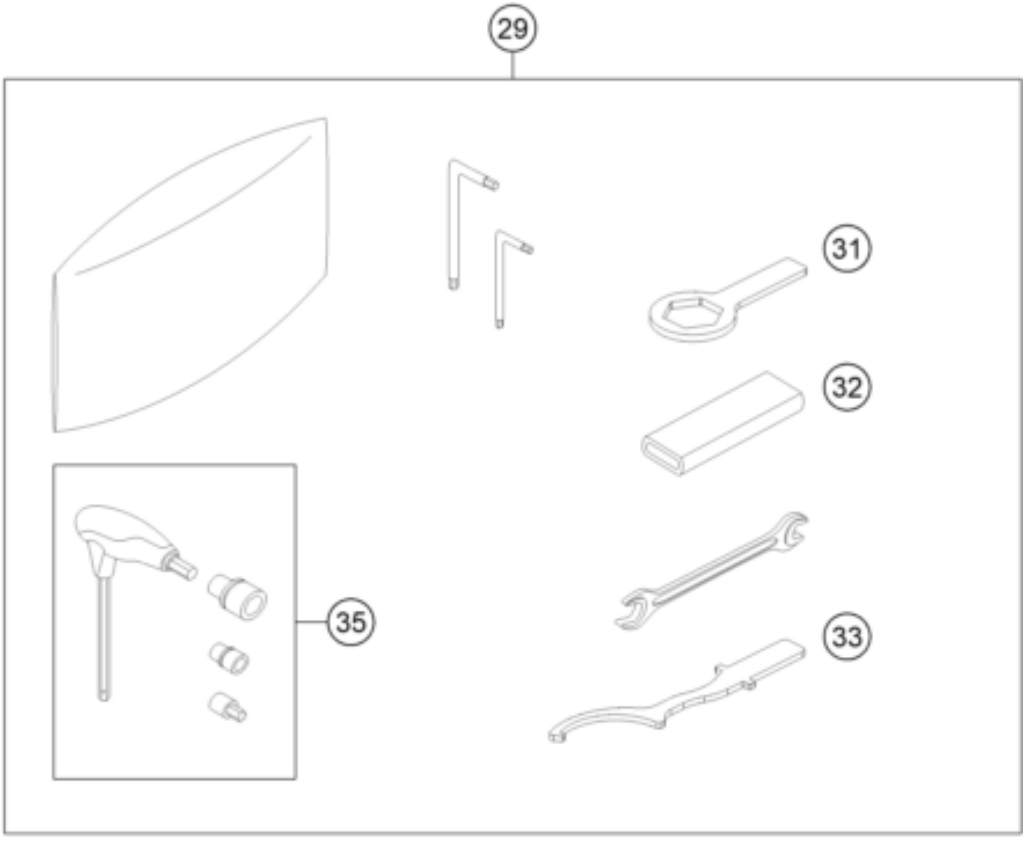

OHNE ABBILDUNG
WITHOUT ILLUSTRATION

0

TECHNISCHE DOKUMENTATION
TECHNICAL DOCUMENTATION
DOCUMENTACION TECNICA
DOCUMENTATION TECHNIQUE
NOTE TECNICHE

1

Pos	Part Number	Description	Additional Text	Quantity
0	58412040100	Rear view mirror, left/right		1.00
0	28512040000	Rear view mirror, right		1.00
0	22102080033AB	Handguard left cmpl.		1.00
0	22102081033AB	Handguard right cmpl.		1.00
0	22103990144	Skid plate		1.00
0	22112920044	Side bag carrier		1.00
0	22112925144	Side bag set		1.00
0	63512992100	GPS bracket		1.00
0	69008021080	clip nut M5		2.00
0	60006001021	Distance rupper airbox 03		2.00
0	22108908000	Windshield		1.00
0	60708008070	rubber bush windshield fixatio		4.00
0	60708008071	Special screw M5x14		4.00
0	64112181100	Bracket for reflector		1.00
0	58412080400	Rear reflector red		1.00
0	60408061050	RUBBER 14X6.5X2.3MM		2.00
0	60307020000	TANK RUBBER		2.00

0	0900000601500S	Special screw M6x15x5,5-8.8 MK		2.00
0	75008023000	Washer tail section UT D=14mm		4.00
0	63512992110	Rubbe Pad GPS holder		1.00
0	00063004202	PRINT LABEL 60X51 MM		1.00
0	00063004105	950 ADV. CARTON F WIND PROT.		1.00
0	63503090016	Lower Alu Skidplate Support		1.00
1	3402761EN	Owner Manual NORDEN 901 / Expe		1.00
29	63729099000	Tool set		1.00
31	60012060032	RING WRENCH 32MM		1.00
32	60012060000	GRIP FOR RING WRENCH		1.00
33	76029062000	HOOK WRENCH F. SHOCK ABSORBER		1.00
35	50329070000	T-WRENCH WS=6/8/10 '97		1.00