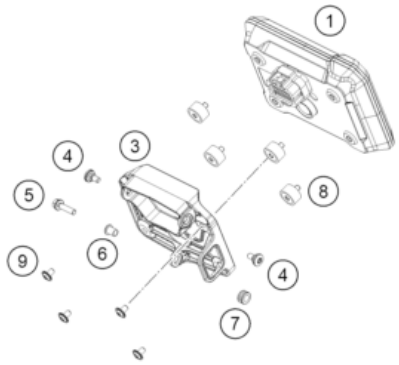

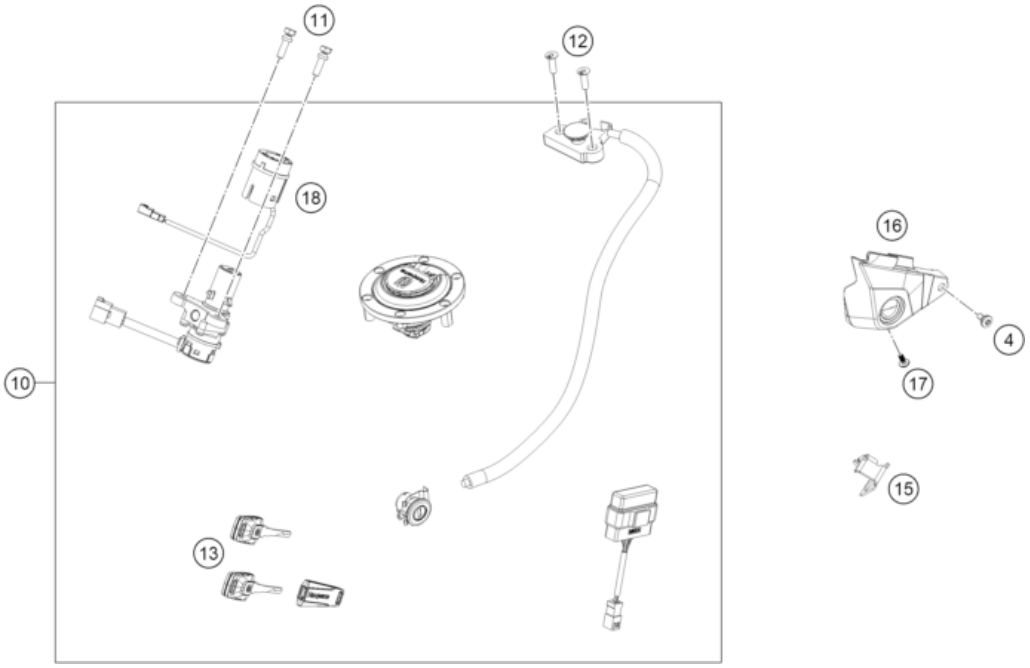

Pos	Part Number	Description	Additional Text	Quantity
1	22114069000	Dashboard		1.00
3	A67814060000	Dashboard support		1.00
4	69008021160	special screw M5x12		3.00
5	0025050206	HH collar screw M5x20 TX30		1.00
6	63514011110	Collar bushing 5.3x7x10x10		1.00
7	60708008070	rubber bush windshield fixatio		1.00
8	61614069010	Absorber Speedometer		4.00
9	073802050083	Oval head screw ISR M5x8-08.8		4.00
10	22111066044	Lock kit, cmpl.		1.00
11	76011064200	Tear-off screw M6 ignition loc		2.00
12	0738060205S	Oval head screw ISR M6x20-A2-7		2.00
13	22111067010	Blank Key HQV		0.00
13	22111067000	Ignition key, HQV		1.00
15	64107051000	Cable Bracket Lock		1.00

16	22107050050	Seat lock cover		1.00
17	0081045121	SCREW FOR PLASTIC K45X12 T20		1.00
18	63511066020	ANTENNA		1.00