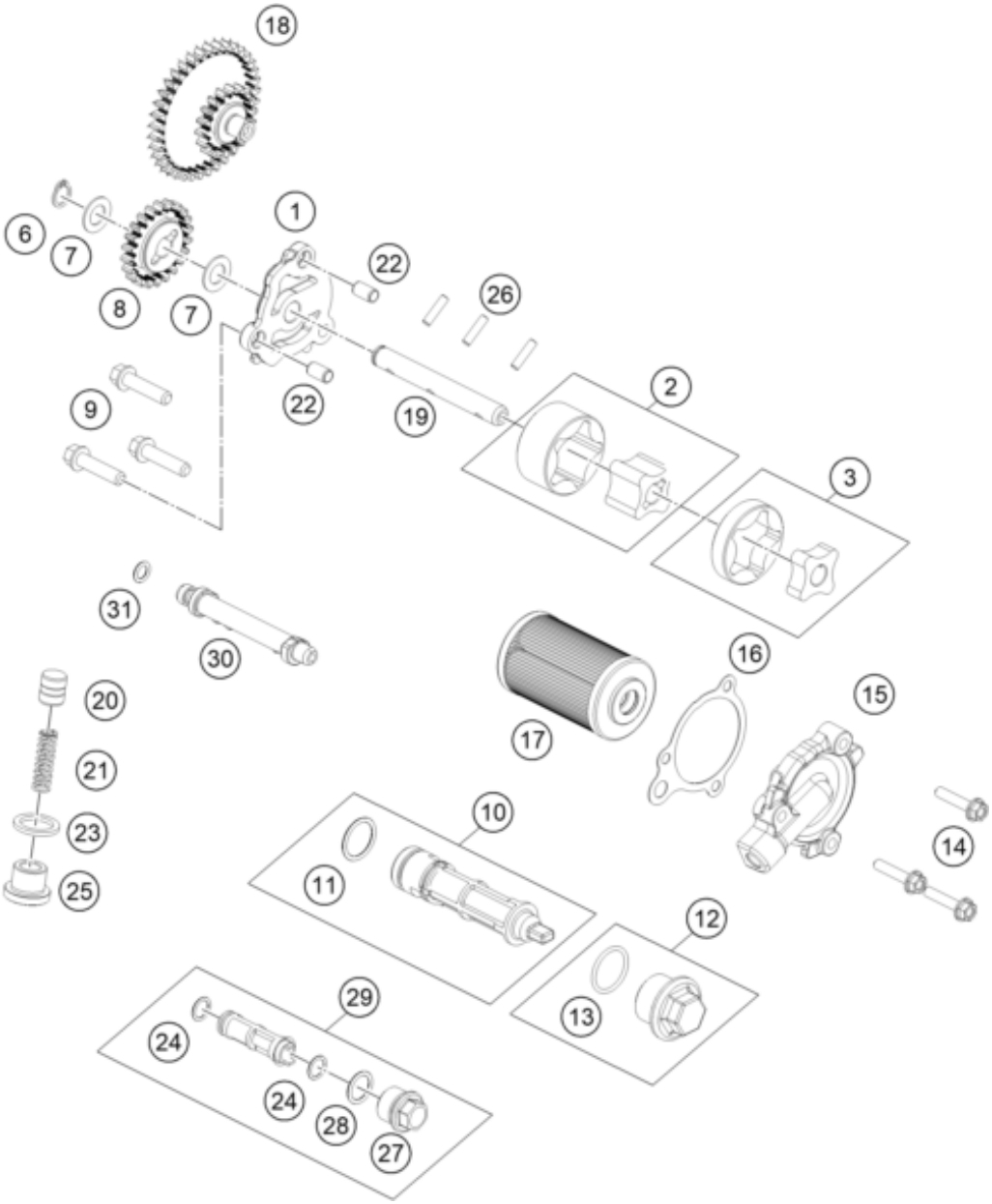

Pos	Part Number	Description	Additional Text	Quantity
1	96338008000	cover pump evacuation		1.00
2	96338009000	KT26 Evacuation Inner/Outer as		1.00
3	96338011000	KT26 Oil Pump Inner/Outer asse		1.00
6	J471010100	Seeger ring 10X1,0		1.00
7	J125100006	WASHER 10,2X18X1		2.00
8	96338001000	gear pump oil driven		1.00
9	J900000602511	Hexagonal bolt M6x25		3.00
10	90238015033	MESH STRAINER CPL.		1.00
11	J770017721	O-RING 17,7X2,1 MM		1.00
12	90138015050	CLOSURE CAP OIL SCREEN		1.00
13	90138015052	O-RING		1.00
14	J900000602510	BOLT FLANGED M6X1		3.00
15	96338041000C1	Oil filter cover		1.00
16	96338041010	Oil filter cover gasket		1.00
17	90138015000	OIL FILTER		1.00
18	96338006000	gear pump oil intermediate		1.00

19	96338002000	shaft pump oil		1.00
20	96338028000	piston valve pressure relief		1.00
21	96338026000	spring oil pump prv k16b ug		1.00
22	J800000601002	Dowel 8x6.3x10	10mm length	2.00
23	J780001602200	RING - SEALING		1.00
24	J7700090151	O-RING 9X1,5		2.00
25	J900001601200	bolt socket M16x1.5		1.00
26	90238003000	PARALLEL PIN		3.00
27	90238017000	CAP STRAINER		1.00
28	J770012520	O-RING 12,5X2		1.00
29	90238016044	MESH STRAINER CPL.		1.00
30	96330065000	rail oil		1.00
31	J770000719000	O Ring		1.00