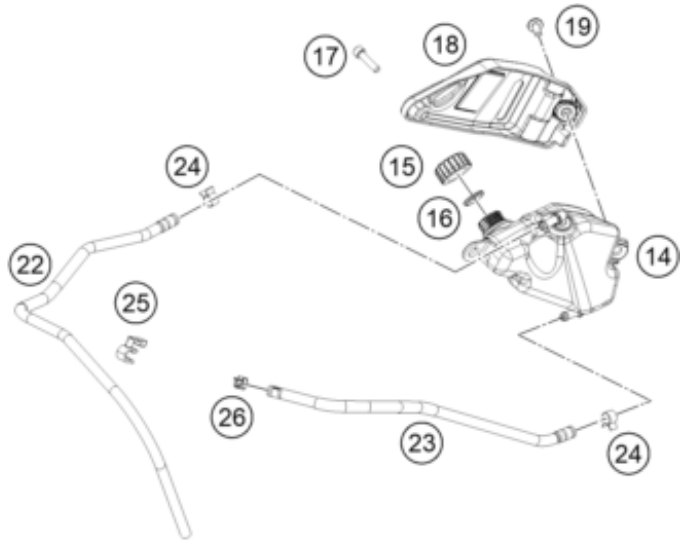

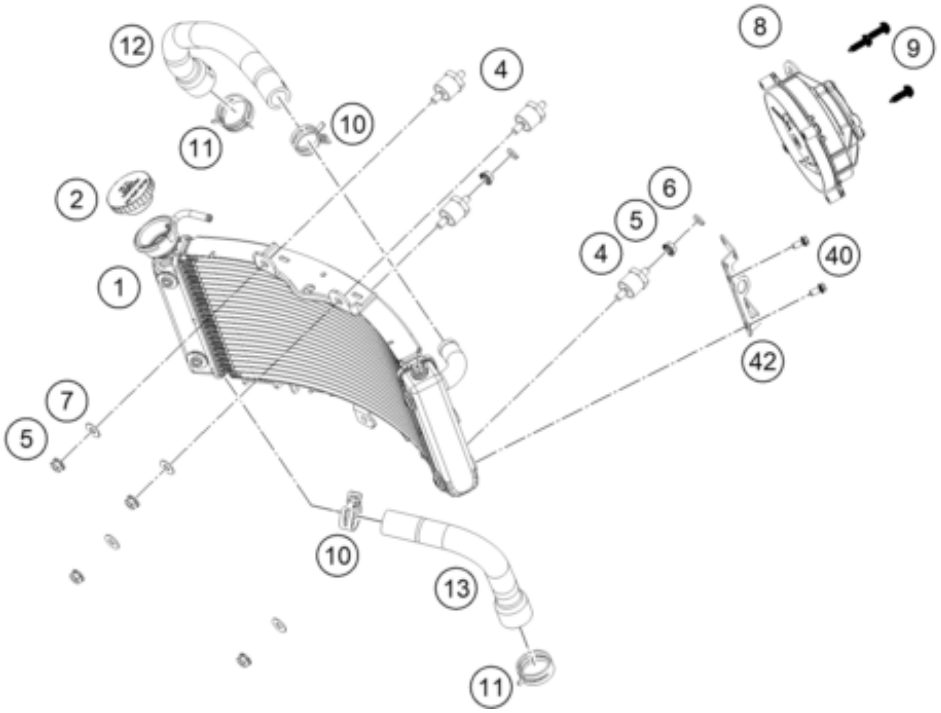

Pos	Part Number	Description	Additional Text	Quantity
1	96235010000	Radiator		1.00
2	90135016100	RADIATOR CAP		1.00
4	93335001000	SILENTBLOCK M6		4.00
5	J926060003	nut hex flange-m6x1xht.6xcl4xb		6.00
6	J127060001	Spring ring B6		2.00
7	J125070004	washer plain-id6.5xod16xthk1xb		4.00
8	95835041044	Radiator fan, cmpl		1.00
9	J900000501900	SCREW TAPPING PAN DIA 4.8		6.00
10	90135020000	HOSE CLAMP D23		2.00
11	J310001202900	Spring band clamp D=29		2.00
12	96235026000	Radiator hose		1.00
13	96235025000	Radiator hose		1.00

14	96335065000	TANK EXPANSION		1.00
15	90135066000	PLUG F. EXPANSION TANK		1.00
16	90102055000	COMPENSATING TANK O-RING		1.00
17	J912060253	Hexagon socket screw, M6X25		1.00
18	96335003000	COVER TANK EXPANSION		1.00
19	J900000601607	SCREW SOCKET M6X1		1.00
22	60035067820	drain pipe		1.00
23	J600001041700	PIPE COOLANT		1.00
24	90107018011	CLAMP 10MM		2.00
25	95835068000	Strap-clip swivel		1.00
26	J300000801000	Spring clip 9.5		1.00
40	J900000501900	SCREW TAPPING PAN DIA 4.8		2.00
42	96335043010	Radiator Bracket LH		1.00