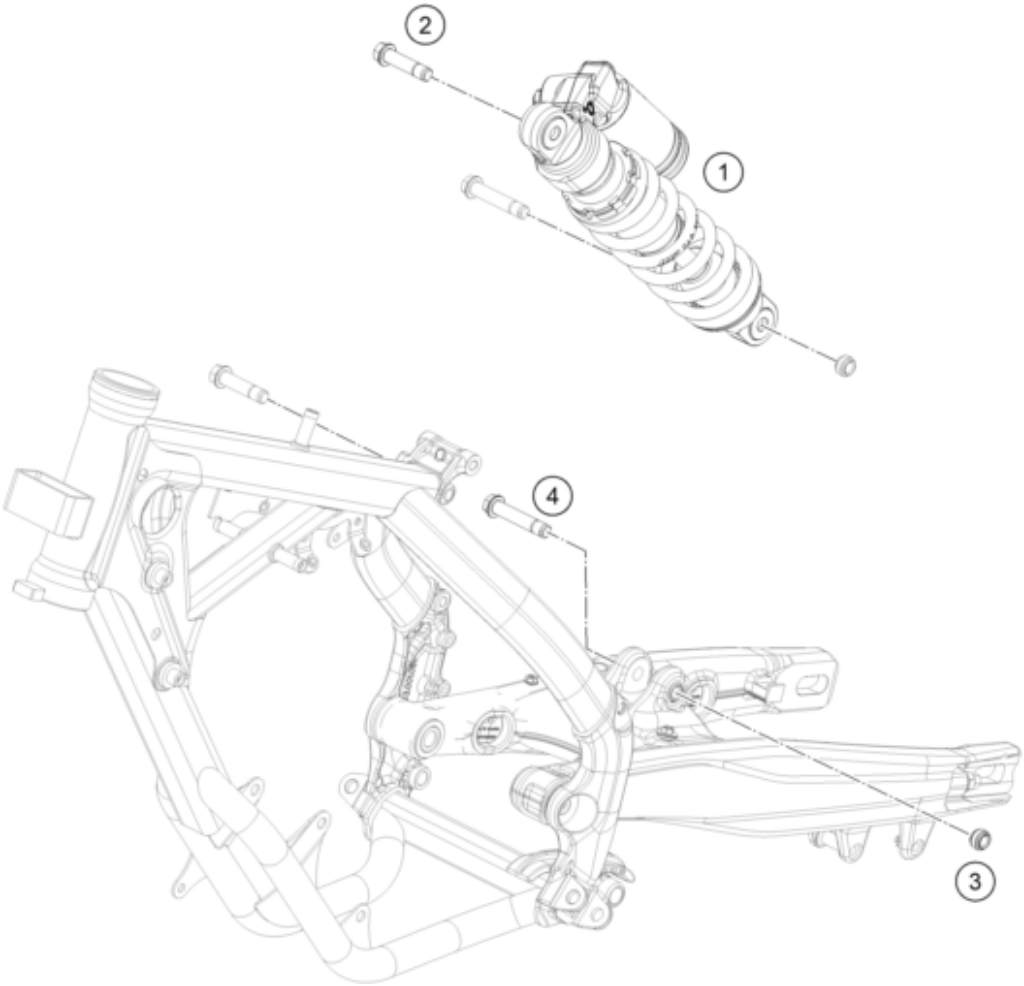

Pos	Part Number	Description	Additional Text	Quantity
1	A405C403X113000	Federbein 65 SX/TC/MC 24		1.00
2	69004089000	HH COLLAR SCREW M10X42 WS13 08		1.00
3	69004095000	ADAPTOR NUT M10		1.00
4	77204089000	HH collar screw M10x52 WS13		1.00