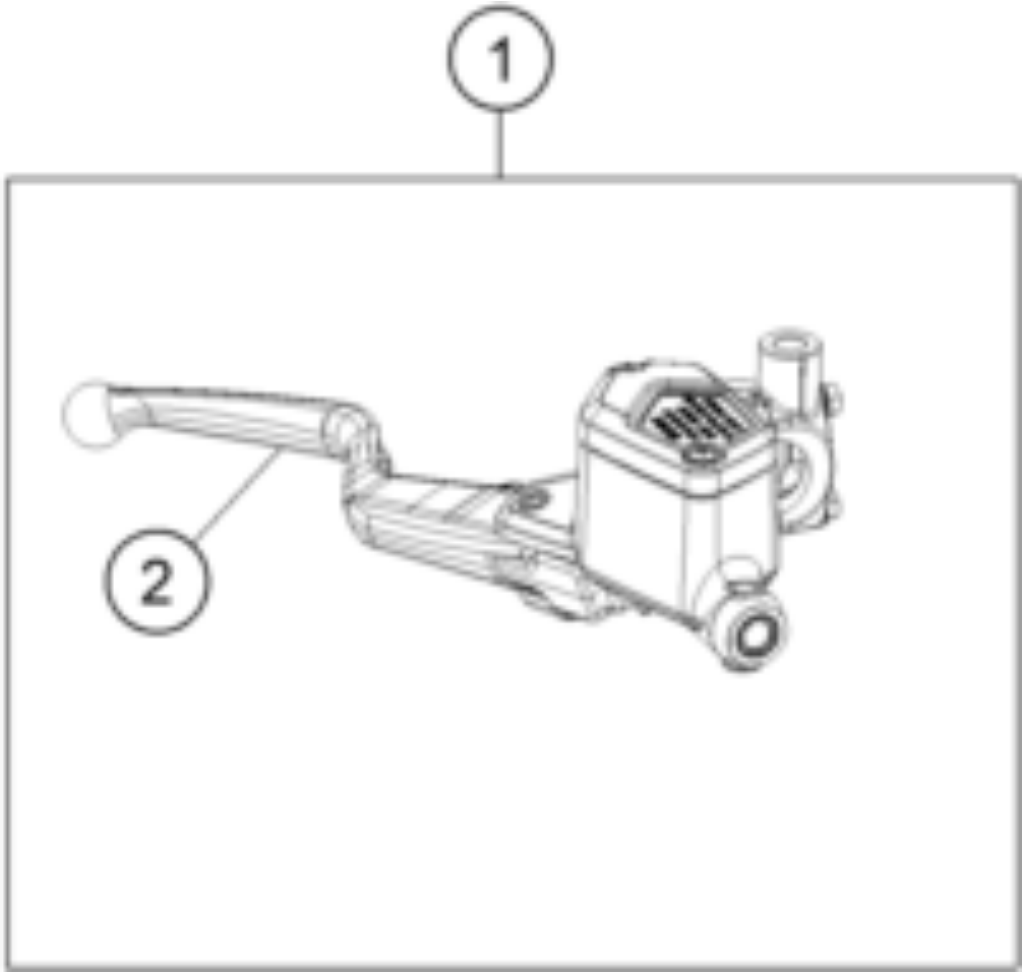

Pos	Part Number	Description	Additional Text	Quantity
1	96213001033	CYLINDER ASSEMBLY MASTER FRONT		1.00
2	96213002000	KIT FR BR LEVER ASSLY		1.00