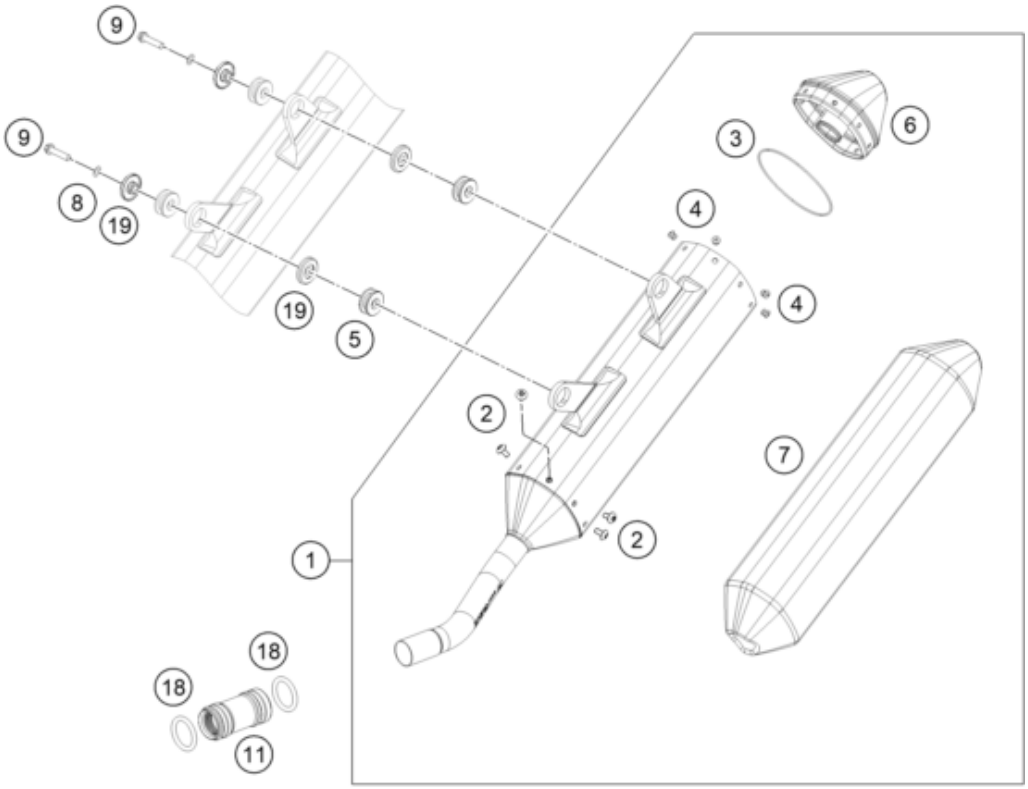

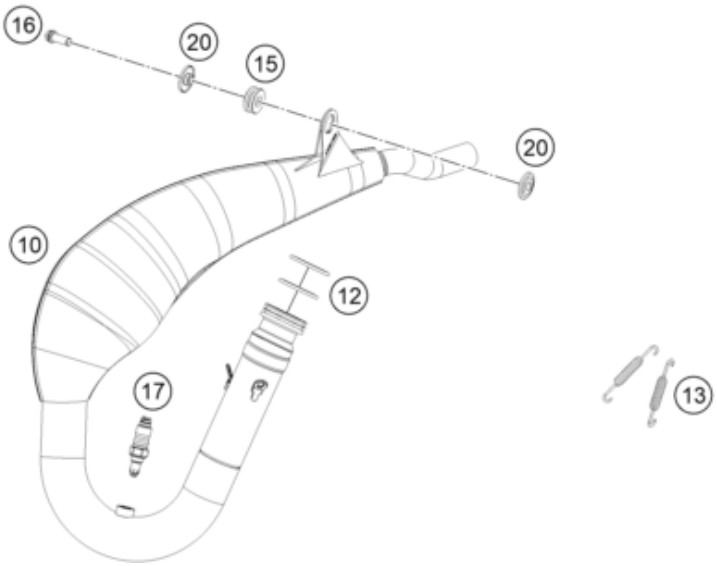

Pos	Part Number	Description	Additional Text	Quantity
1	A35005081000	Silencer TE		1.00
2	78105081010	SCREW TORX M5X10		7.00
3	0770740015	O-RING 74,00X1,50 FKM 75SH		1.00
4	0011480800	DUMMY RIVET 4,8X 8 NIRO		7.00
5	77205068000	DAMP. COMPON. BLACK		2.00
6	A44005079060	end cap cpl.		1.00
7	55505083085	stuffingyarn package		1.00
8	50233041000	Pair of washers M6 NORDLOCK		2.00
9	0025060306	HH collar screw M6x30 TX30		2.00
10	A45005009000	Exhaust manifold with catalyst	with CAT	1.00
10	A44005007000	manifold	without CAT	0.00
11	55405057000	exhaust rubber		1.00

12	0770440030	O-RING 44,00X3,00 VITON	ONLY FOR 250	2.00
13	A46005016000	Tension spring L=62mm		2.00
15	79105068000	Damper gray	2 Piece without CAT	1.00
16	0025080306	HH collar screw M8x30		1.00
17	75041090200	LAMBDA SENSOR		1.00
18	55405058000	hose spring		2.00
19	77205169000	BUSHING 7.5x12x28x8.3 11		4.00
20	77805069000	BUSHING 8.5x12x28x8.3	4 Piece without CAT	2.00