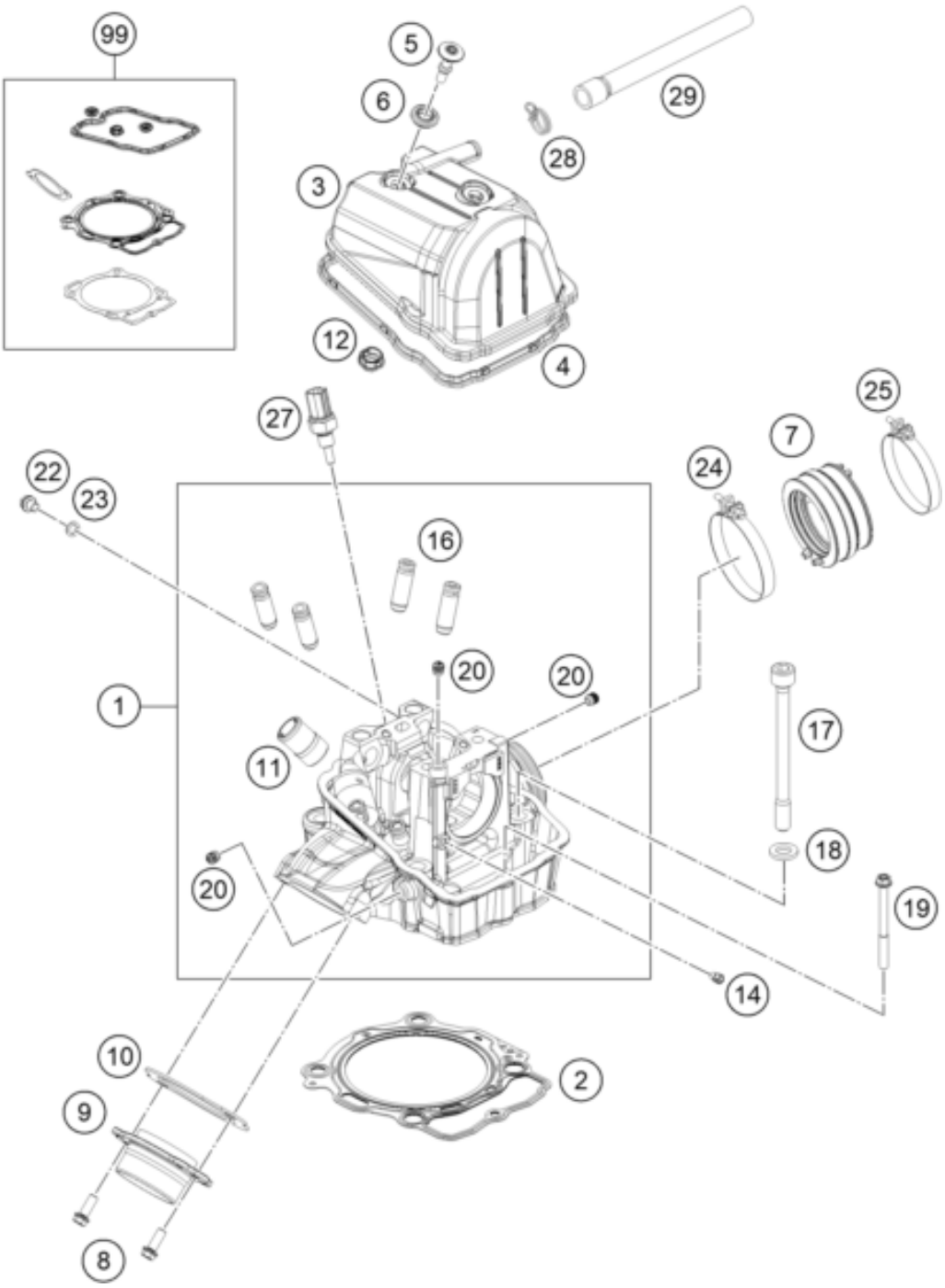

Pos	Part Number	Description	Additional Text	Quantity
1	A48036520144	Cylinder head cmpl.		1.00
2	79430036010	CYLINDER HEAD GASKET (DN95)		1.00
3	A48036052000C1	Valve cover		1.00
4	A48036053000	Valve cover seal		1.00
5	79136054000	Valve cover screw		2.00
6	79136054050	Rubber seal for collar screw		2.00
7	79536044000	rubber sleeve		1.00
8	0025060166S	HH collar screw M6x16 TX30 SL		2.00
9	78136139100	Exhaust system flange		1.00
10	79536041000	Exhaust gasket		1.00
11	58030010200	SCREW IN NOZZLE M20X1,5		1.00
12	79536053150	valve cover gasket		1.00

14	60030063070	oil jet 70 M5		1.00
16	79536025001	Valve Guide intake		4.00
17	79530044000	Cylinder head bolt		4.00
18	77336089010	washer 19x10.5x2.5		4.00
19	0025060756	HH COLLAR SCREW M6X75 TX30		1.00
20	59030296000	SCREW PLUG		3.00
22	0025060086S	Hex collar scr., M6x8, ISA 30,		1.00
23	0603061001	CU-SEAL RING DIN7603-6X10X1		1.00
24	61036047000	Hose clamp GEMI 63mm 05		1.00
25	77236048000	Hose clip GEMI 58		1.00
27	79435047000	water temperature sensor		1.00
28	58431082300	CLAMP YDNAC 10173 (18MM)		1.00
29	A49030087000	Engine vent hose		1.00
99	A48030097000	gasket kit cylinder MX 450		0.00