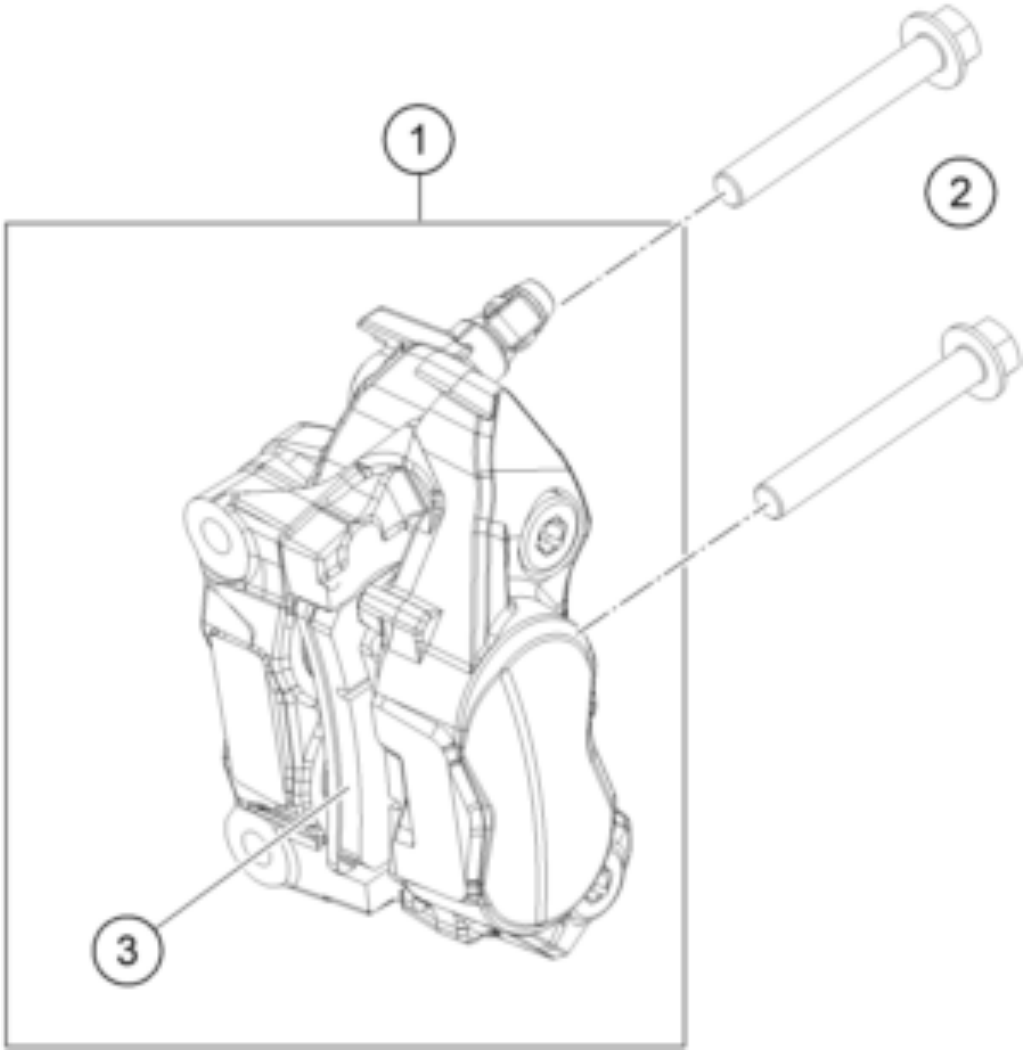

Pos	Part Number	Description	Additional Text	Quantity
1	96313015000	Brake caliper front		1.00
2	J01008060S	HH collar screw M8x1x60		2.00
3	96313030000	FRONT CALIPER BR PAD KIT-SINTE		1.00