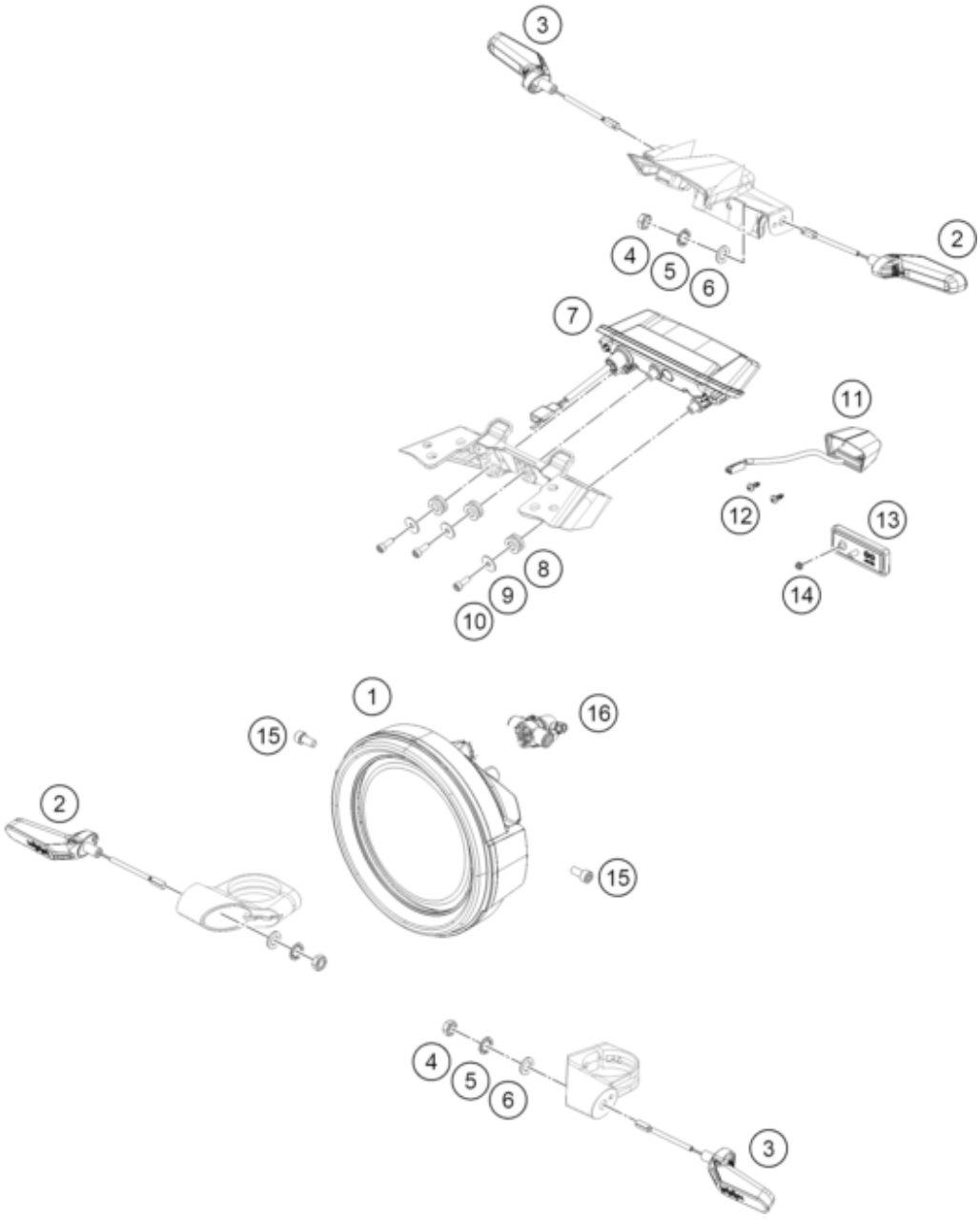

Pos	Part Number	Description	Additional Text	Quantity
1	A61714001000	Headlight		1.00
2	28114025000	Turn signal left		2.00
3	28114026000	Turn signal right		2.00
4	J934100006	Nut hex thin-M10x1.25		4.00
5	J06797100183	Toothed washer, M10		4.00
6	J125100009	Washer M10		4.00
7	A61714040000	Tail light		1.00
8	90507040001	RUBBER SLEEVE		3.00
9	93308015010	Washer, license plate holder s		3.00
10	J912050143	BOLT SOCKET M5X0.8		3.00
11	28114047000	License plate lighting		1.00
12	J981420133	SHEET MET.SCR. DIN 7981 4,2X13		2.00
13	28112080000	Reflector, red		1.00
14	J06923050053	Hex collar nut, M5		1.00
15	J900000601208	BOLT SOCKET-M6X1XL12XCL8.8XBLA		2.00