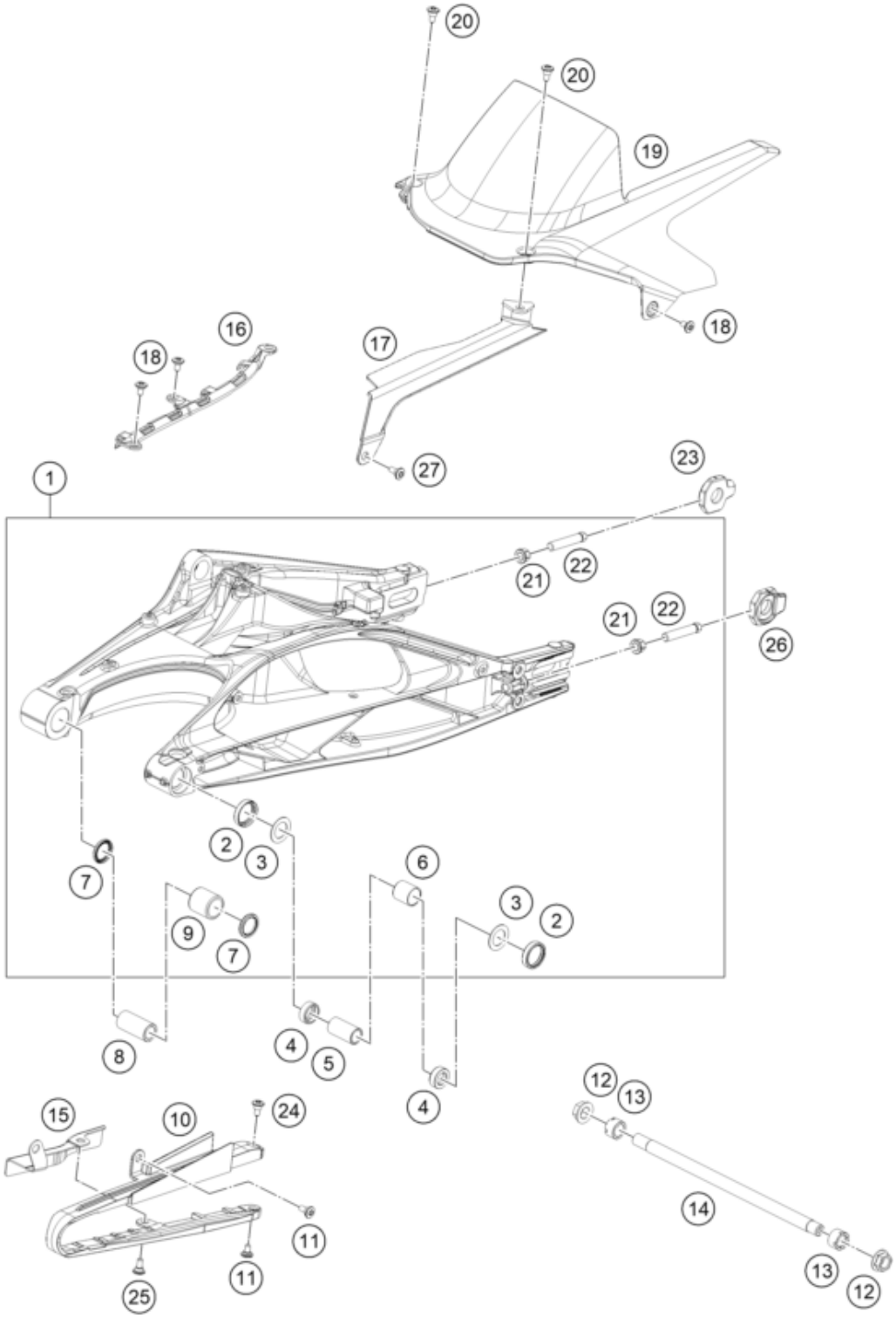

Pos	Part Number	Description	Additional Text	Quantity
1	96304030000C1	KIT SWING ARM ASSLY D-390 EL O		1.00
2	90104034001	OIL SEAL RING 25X32X7		2.00
3	90104036000	Thrust washer 22.2x31.7x1		2.00
4	90104034000	cup for radial shaft seal		2.00
5	90104032000	sleeve bushing 15.1x20x38		1.00
6	96304031000	BUSH		1.00
7	96304034001	Seal oil		2.00
8	96304032000	swingarm bush		1.00
9	96304033000	swingarm needle bearing		1.00

10	96304066000	SLIDER CHAIN		1.00
11	J900000601207	SCREW SOCKET STEP M6X1		2.00
12	J910001401000	nut swingarm axle		2.00
13	90104046000	swingarm adjusting ring		2.00
14	96304037000	Swingarm axle		1.00
15	96304066010	SHIELD SLIDER CHAIN		1.00
16	96313026000	GUIDE CABLE		1.00
17	96304060000	COVER CHAIN OUTER		1.00
18	J900000601207	SCREW SOCKET STEP M6X1		3.00
19	A61704050000	COVER CHAIN REAR		1.00
20	J900000600904	special screw M6x15-8.8-hexago		2.00
21	90104010002	flanged hex nut M10x1.25 WS13		2.00
22	90104040000	BOLT HEX M10X1.25X50 WS10		2.00
23	96310084000	chain tensioner right		1.00
24	J900000600904	special screw M6x15-8.8-hexago		1.00
25	J900000601502	SCREW SOCKET STEP M6X1		1.00
26	96310083000	chain tensioner left		1.00
27	J900000601502	SCREW SOCKET STEP M6X1		1.00