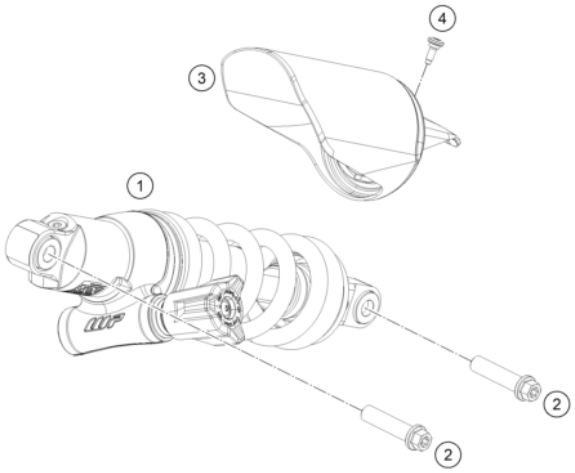

Pos	Part Number	Description	Additional Text	Quantity
1	A678C441W305000	Shock strut HQV 901 NORDEN Exp		1.00
2	0025120506S	HH COLLAR SCREW M12X50 TX45		2.00
3	63508075000	Splash protection shock absorb		1.00
4	69008021160	special screw M5x12		1.00