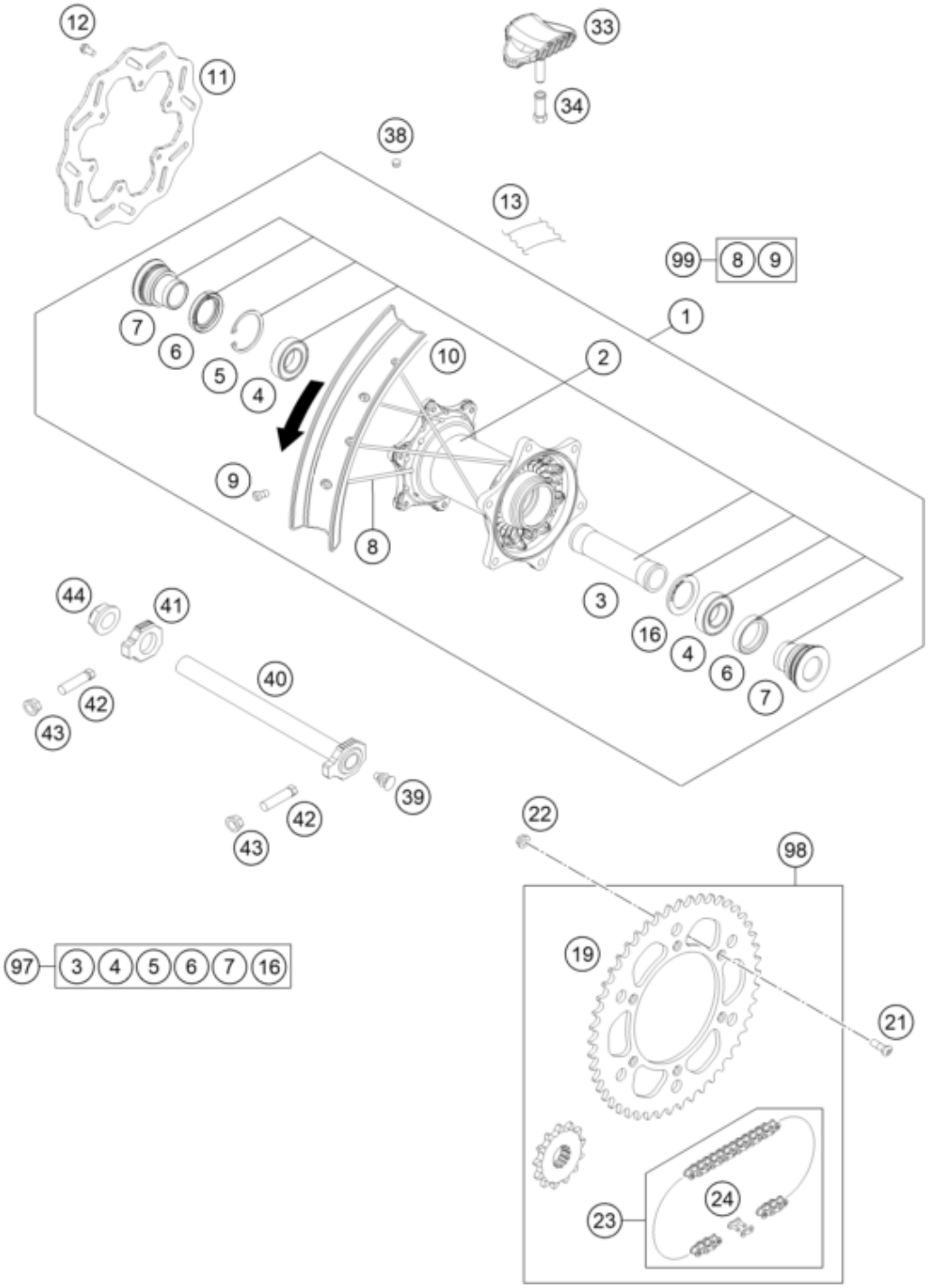

Pos	Part Number	Description	Additional Text	Quantity
1	2651000124430	REAR WHEEL CMPL.2.15X18" DID		1.00
2	26510010144	REARHUB CPL.		1.00
3	77710011000	BEARING DISTANCE TUBE 121,5MM		1.00
4	0625060058	Grooved ball bear.6005 DDU2CG2		2.00
5	0472047175	CIRCLIP DIN0472-47X1,75		1.00
6	0760324771	Radial shaft seal 32X47X7 BSL		2.00
7	78010016000	BUSHING FOR HUB 08		2.00
8	79010071193	SPOKE M4,5X193- 18" 1		36.00
9	77109072000	Spoke nipple M4.5 AL		36.00
10	8121007010030A	Rear rim 2.15x18" DID		1.00
11	25010060000	BRAKE DISC REAR D=220MM		1.00

12	59009062013	SPECIAL SCREW M6X13 WS=8 10.9		6.00
13	50310073200	Tube protector 18" and 19"		1.00
16	77710015000	DISTANCE RING		1.00
19	7771015104830	SPROCKET 48-T BLACK		0.00
19	7771015104930	Sprocket 49-t		0.00
19	7771015105030	Rear sprocket 50-t, black		1.00
19	7771015105130	Rear sprocket 51-t		0.00
19	7771015105230	Rear sprocket 52-t, black		0.00
21	0019080266S	COUNTER-SUNK SCREW ISA45 M8X26	ONLY FOR 78003023081	6.00
22	06923080003	Hex. nut DIN EN 1661 M8 WS13		6.00
23	78010167118	CHAIN DID 118 LINKS		1.00
24	78010166000	CONNECTING LINK F. 78010167118		1.00
33	78110090100	RIM LOCK 2,15"		1.00
34	77110090050	NUT FOR WHEEL HOLDER		1.00
38	55003135000	PLUG FOR RIM		0.00
39	50210086000	Plug SFL16		0.00
40	77310085044	Thru axle rear wheel cmpl. 07		1.00
41	50310084000	Chain tension adjuster, right		1.00
42	50304040100	screw M10x1.25x50 WS10		2.00
43	58414030000	HH COLLAR NUT M10X1,25 WS=13	MINI ADV.	2.00
44	50310099000	Hexagon nut M20x1.5		1.00
97	78010015010	REAR WHEEL REP. KIT		0.00
98	00050002051	DRIVETRAIN KIT HQV 13T/50T		0.00
99	00050000978	SPOKE KIT REAR		0.00