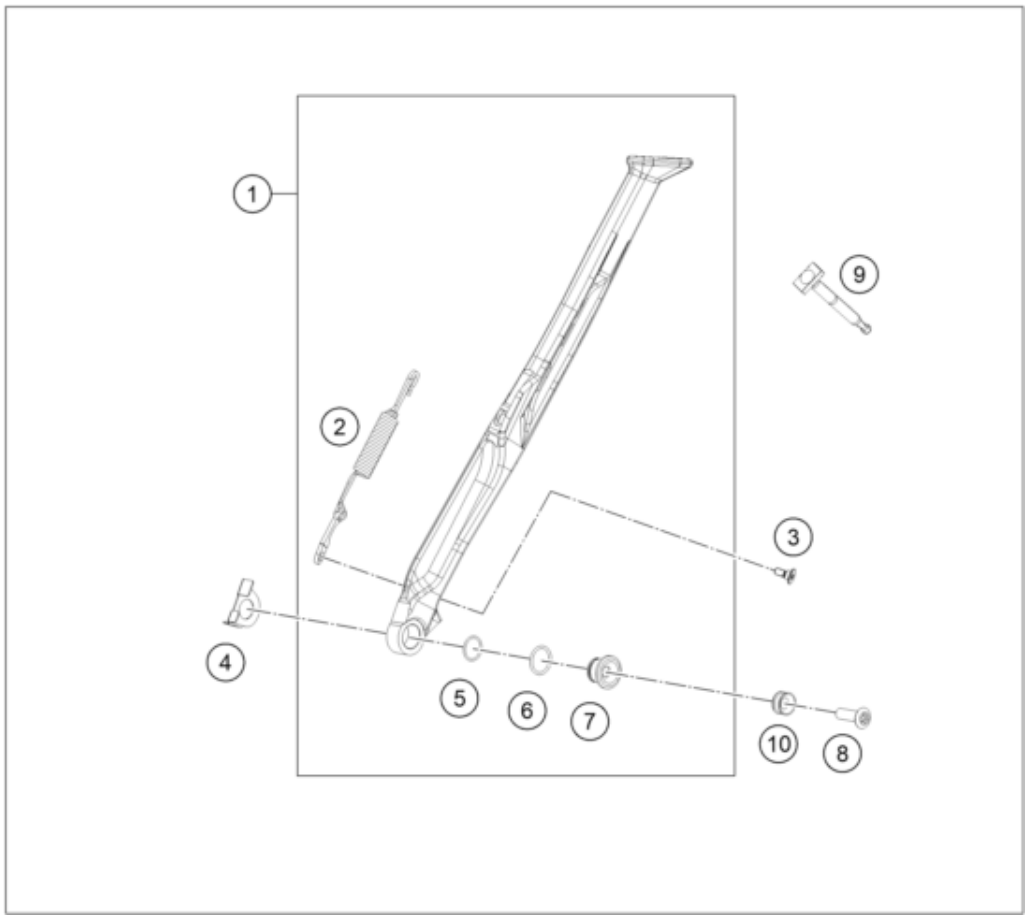

Pos	Part Number	Description	Additional Text	Quantity
1	A46003023044	Side stand cmpl.		1.00
2	A46003024000	Side stand spring		1.00
3	69013099050	Screw for expansion tank	ONLY AUS	1.00
4	A46003023050	Side stand stopper sheet		1.00
5	0770125015	O-RING 12,5X1,5 NBR		1.00
6	0770180020	o-ring 18.00x2.00 NBR70		1.00
7	78003023080	SIDE STAND BUSHING EXC USA 08		1.00
8	0019080306S	COUNTER-SUNK SCREW ISA45 M8X30		1.00
9	A46003025000	Side stand, rubber strap		1.00
10	78003023081	Side stand bushing	ONLY FOR 78003023081	1.00