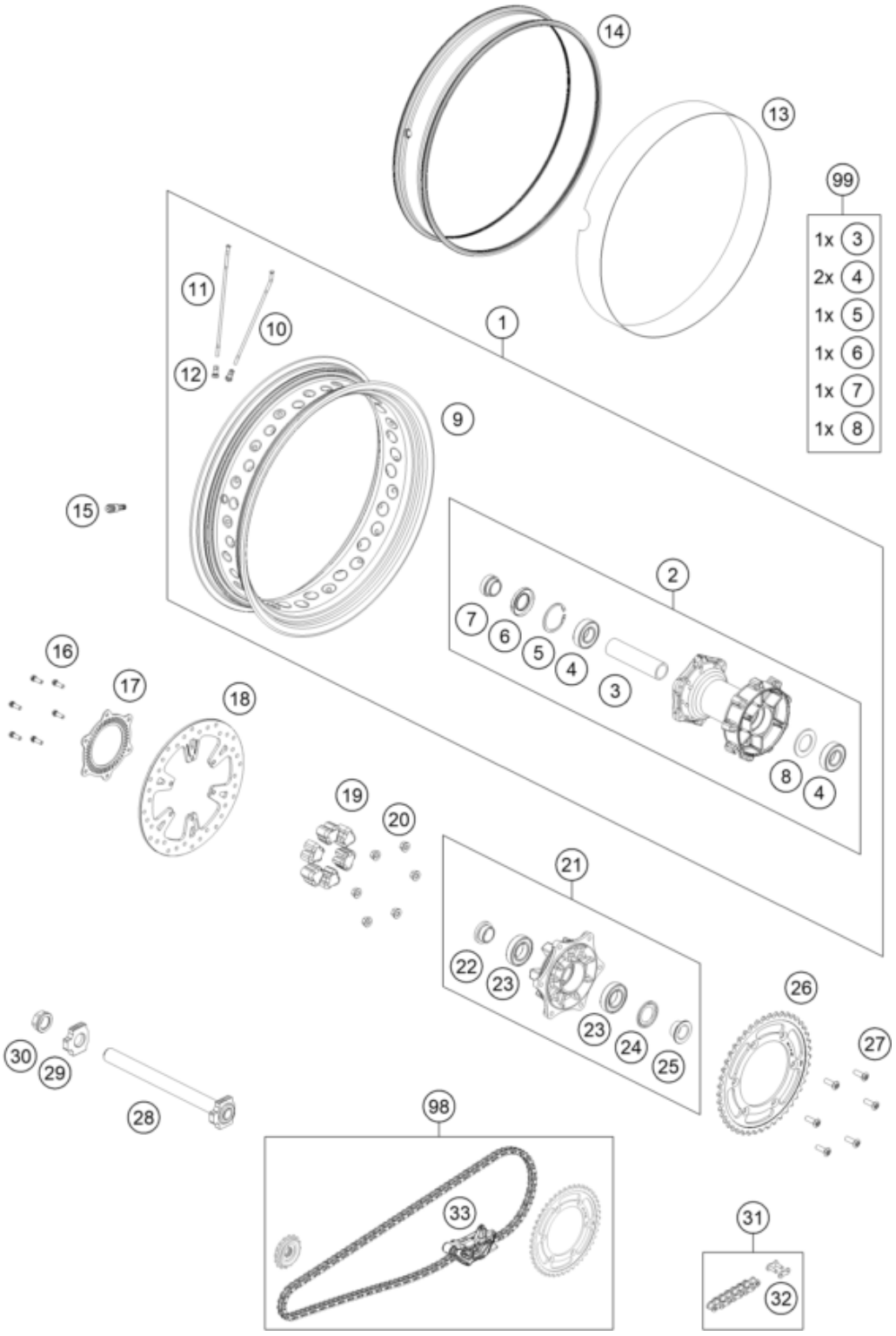

Pos	Part Number	Description	Additional Text	Quantity
1	63710001044C1	Rear wheel cmpl. 4.5x18"	with anodized Hub	1.00
2	60310010244C1	Rear hub cmpl.	anodized	1.00
3	60010011000	Bearing spacing tube L=124.8mm		1.00
4	0625062052	Grooved ball bear. 6205-2RSHC3		2.00
5	0472052200	CIRCLIP DIN0472-52X2		1.00
6	0760305271	Radial shaft seal 30X52X7		1.00
7	60310013000	SPACER BUSHING REAR WHEEL R/S		1.00
8	60010015000	Spacer ring 03		1.00
9	6031007010033A	Rim 4,5x18" TL bl.w.sticker		1.00

10	60310071000	SPOKE 5/4.37/M5		18.00
11	60310171000	SPOKE 5/4.37/M5		18.00
12	60310072200	Spoke nipple Quadrax M5		36.00
13	60310073100	RIM BAND 18"		1.00
14	60310177100	GASKET RUBBER 4.5"X18"		1.00
15	60309176000	VALVE		1.00
16	59009062019	SPECIAL SCREW M6X19 WS=8 10.9		6.00
17	60142021100	Phonic wheel ABS, rear		1.00
18	63510060100	Brake disc rear		1.00
19	54610459000	Rubber damping block 91		6.00
20	06923080003	Hex. nut DIN EN 1661 M8 WS13		6.00
21	7501005004433	Sprocket wheel carrier cmpl. b		1.00
22	60110014000	SPACER BUSH. SPR. SUPP. IN. 06		1.00
23	0625060060	BALL BEARING 6006 DDU2CG23S6NM		2.00
24	60110016000	NILOS RING 6006AV		1.00
25	60110012000	SPACER BUSH. SPROCKET SUPP. 06		1.00
26	75010051045	Sprocket 45-t steel		1.00
27	0019080266S	COUNTER-SUNK SCREW ISA45 M8X26	ONLY FOR 78003023081	6.00
28	69010181044	Rear axel cmpl.		1.00
29	60010084000	Chain tension adjuster, right,		1.00
30	61010086000	Collar nut M25X1.5 WS=32 05		1.00
31	76910065118	chain DID 118 roll		0.00
32	76910066000	Rivet link chain DID 520 VP2-T		0.00
33	63510067118	chain X-Ring 118 links with ch		1.00
98	SPAB16G453M118E	Drivetrain kit 16Z/45Z		0.00
99	60310015000	wheel bearing repair kit		0.00