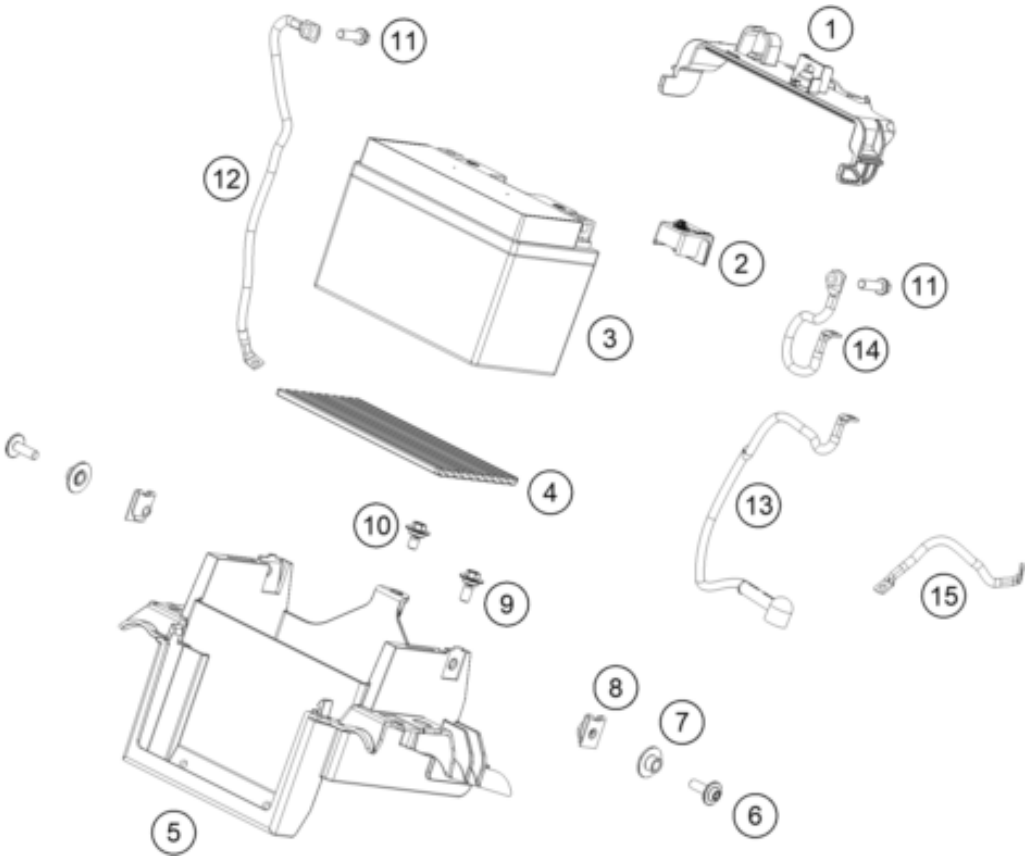

Pos	Part Number	Description	Additional Text	Quantity
1	63508055100	Clamping bracket		1.00
2	62111059060	COVER POSITIVE POLE		1.00
3	64111053000	battery HTZ12A-BS(DA)		1.00
4	63511053050	Rubber battery holder		1.00
5	63508025110	Electrics bracket front		1.00
6	69014017000S	special screw M6x18-8.8 ISA30		2.00
7	0800000600801	Seat bushing		2.00
8	93008082010	Range change metal nut M6		2.00
9	83008100015	Special screw M6x15x5.5		1.00
10	83008000012	special screw M6x12x3		1.00
11	0025060206	HH collar screw M6x20 TX30		2.00
12	63511097000	Ground wire		1.00
13	63511059000	Starter cable		1.00
14	63511059050	Battery cable		1.00
15	64111096000	mass cable starter-frame		1.00