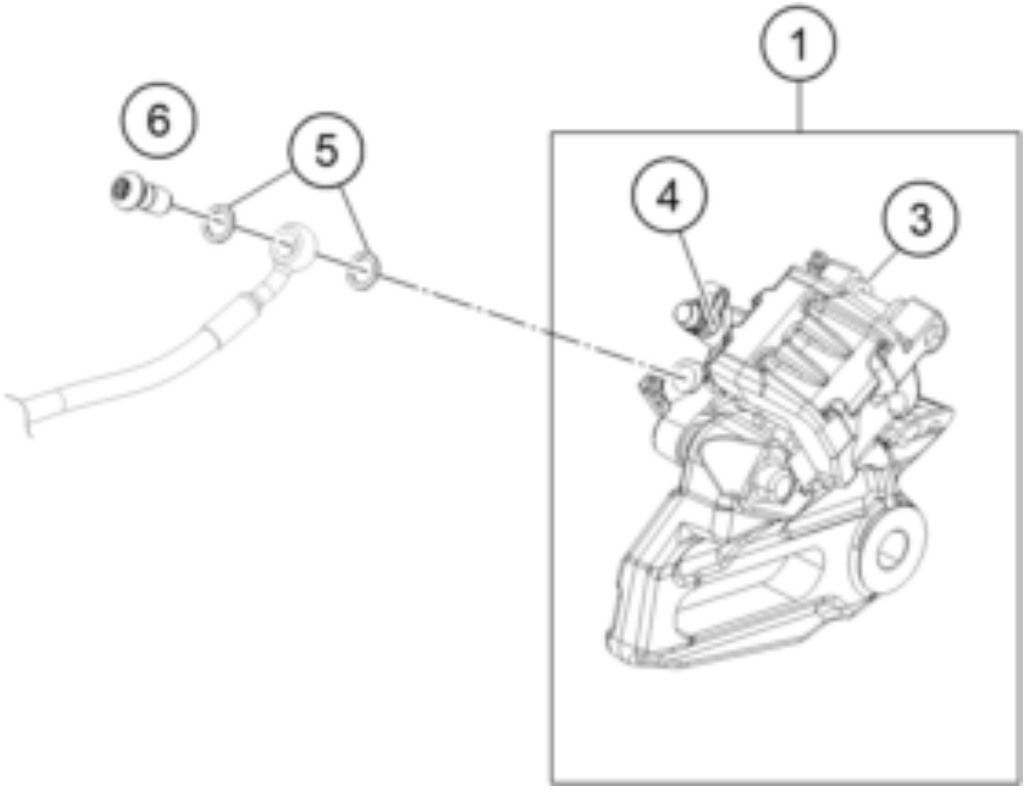

Pos	Part Number	Description	Additional Text	Quantity
1	94513080000	CALIPER ASSEMBLY REAR		1.00
3	90113090000	REAR BRAKE PADS - SET		1.00
4	90113121000	BLEEDER SCREW		1.00
5	90113026000	COPPER GASKET		8.00
6	90113013000	BANJO SCREW		1.00