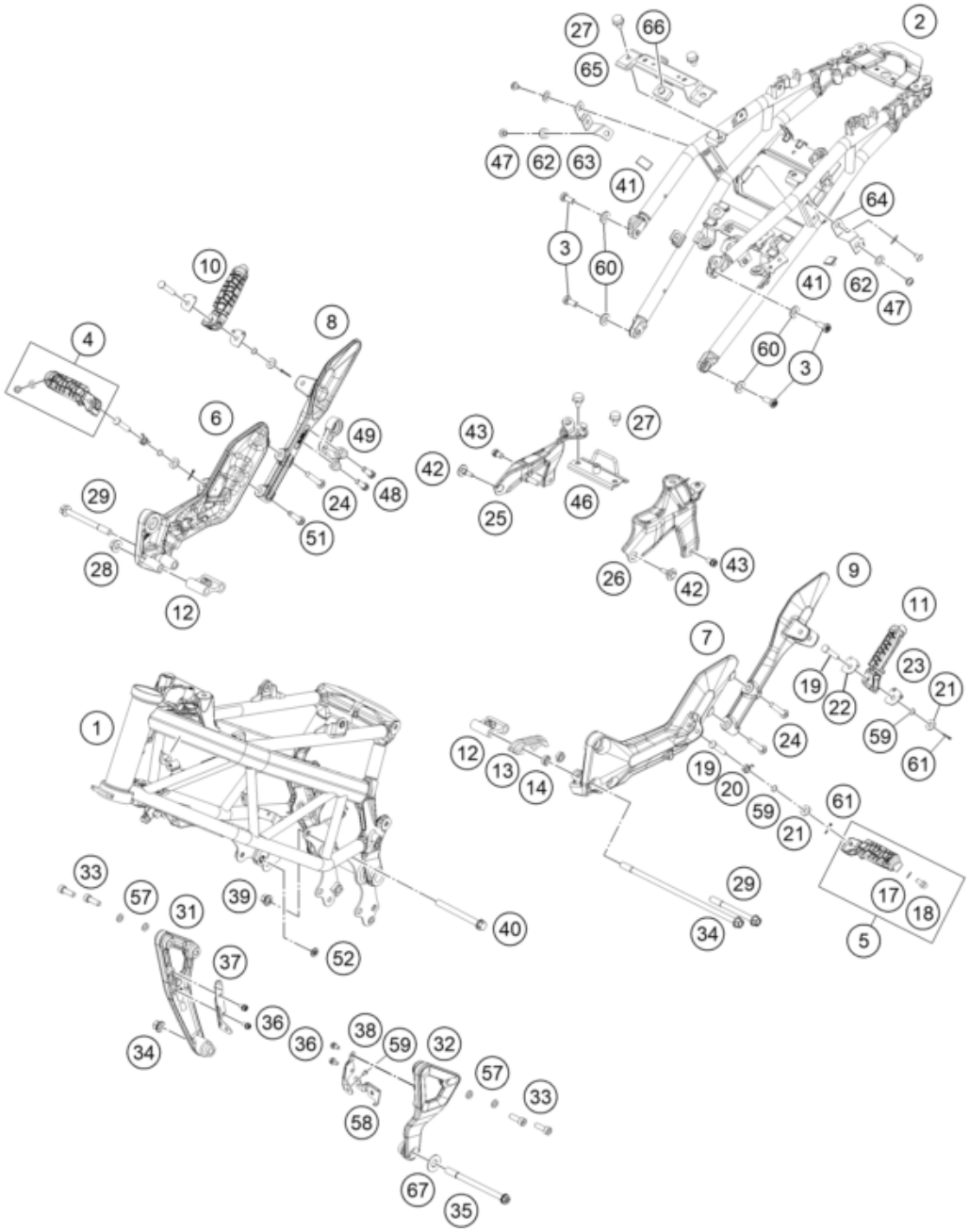

Pos	Part Number	Description	Additional Text	Quantity
1	28103001000C1	Frame		1.00
2	28103002000C1	HUSQ FRAME RR WITH BLK POW COA		1.00
3	J912080251	Hexagon screw M8X25		4.00
4	93003141033	Front footpeg cmpl. right		1.00
5	93003140033	Front footpeg cmpl. left		1.00
6	28603039000	Front footpeg bracket right		1.00
7	28603038000	Front footpeg bracket left		1.00
8	28603049100	holder step pillion rh		1.00
9	28603048100	holder step pillion lh		1.00
10	93003151033	Rear footpeg cmpl. right	incl. washer #23 & screw #24	1.00
11	93003150033	Rear footpeg cmpl. left	incl. washer #23 & screw #24	1.00
12	90103038001	footrest support holder, front		2.00
13	90104070000	chainguide		1.00

14	90104066010	spacer chainguide		2.00
17	90103040001	PLAIN WASHER 6,4X12X1		2.00
18	J029060103S	CAP SCREW M6X10 SS		2.00
19	28103044000	Pin for front footpeg		4.00
20	93003042000	Footpeg spring		2.00
21	J125080005	WASHER M8		4.00
22	28103054020	Lock plate lower		2.00
23	28103054010	Lock plate upper		2.00
24	J025080453	Hex collar screw, M8x45		3.00
25	28103001084	SUPPORT TANK RH		1.00
26	28103001083	SUPPORT TANK LH		1.00
27	93007044000	Retaining pin		4.00
28	90103038002	FLANGED NUT M10X1.25 WS14		1.00
29	J900001010700	Hexagon collar screw M10x107		2.00
31	28103014000C1	ENG.STAY RH- BLACK GLOSS ANODI		1.00
32	28103013000C1	ENG.STAY LH- BLACK GLOSS ANODI		1.00
33	J912080256	ISK-Screw M8x25		4.00
34	J900001028500	Hexagon collar screw M10x285		1.00
35	90203008000	BOLT M10X135		1.00
36	J900000600900	Hexagon collar screw M6x8		4.00
37	28535002000	Radiator retaining bracket, ri		1.00
38	28535001000	Radiator retaining bracket, le		1.00
39	93003005100	Nut socket-M10x1.25		1.00
40	J025101103	HH COLLAR SCREW M10X110 WS14		1.00
41	90507047041	SEAT DUMPER SOZIUS SEAT		2.00
42	J025080246	Hex collar screw. M8x23.5		2.00
43	J025080126	Hex collar screw, M8X12		2.00
46	28103001085	bracket tank rear middle		1.00
47	90508006004	SOCKET HEAD BOLT M6X1X8		4.00
48	J025080256	Hex collar screw. M8x25		2.00
49	28105088000	Exhaust system bracket		1.00
51	J025080351	Hex collar screw, M8x35		1.00
52	90108023100	Clip		1.00
57	J125080001	Washer M8		4.00
58	28111061000	BRACKET HORN		1.00
59	J770009015	O-RING 9X1,5		4.00
60	J690000801500	washer plain-id8.2xod15xt2xbla		4.00
61	J094020186	pin cotter-dia. 2.5xl 18		4.00
62	J690001000200	Washer, 9.8x18x1.5		4.00
63	28103002073	Connecting plate, subframe		1.00
64	28103002055	bracket cover side lh		1.00
65	28103002092	BRACKET SEAT PILLION		1.00
66	93007047041	Seat damper		1.00
67	J125100009	Washer M10		1.00