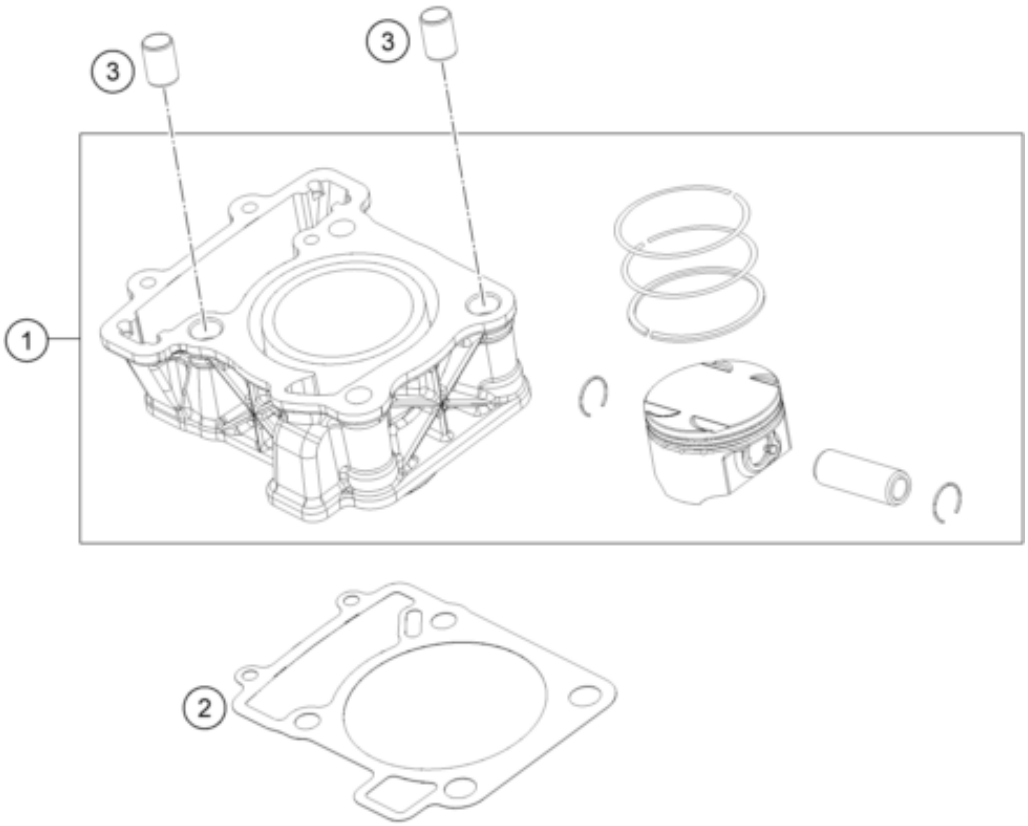

Pos	Part Number	Description	Additional Text	Quantity
1	90630038000C1	Cyclinder + piston		1.00
2	90130035000	CYLINDER BASE GASKET		1.00
3	90130003007	DOWEL D14		2.00