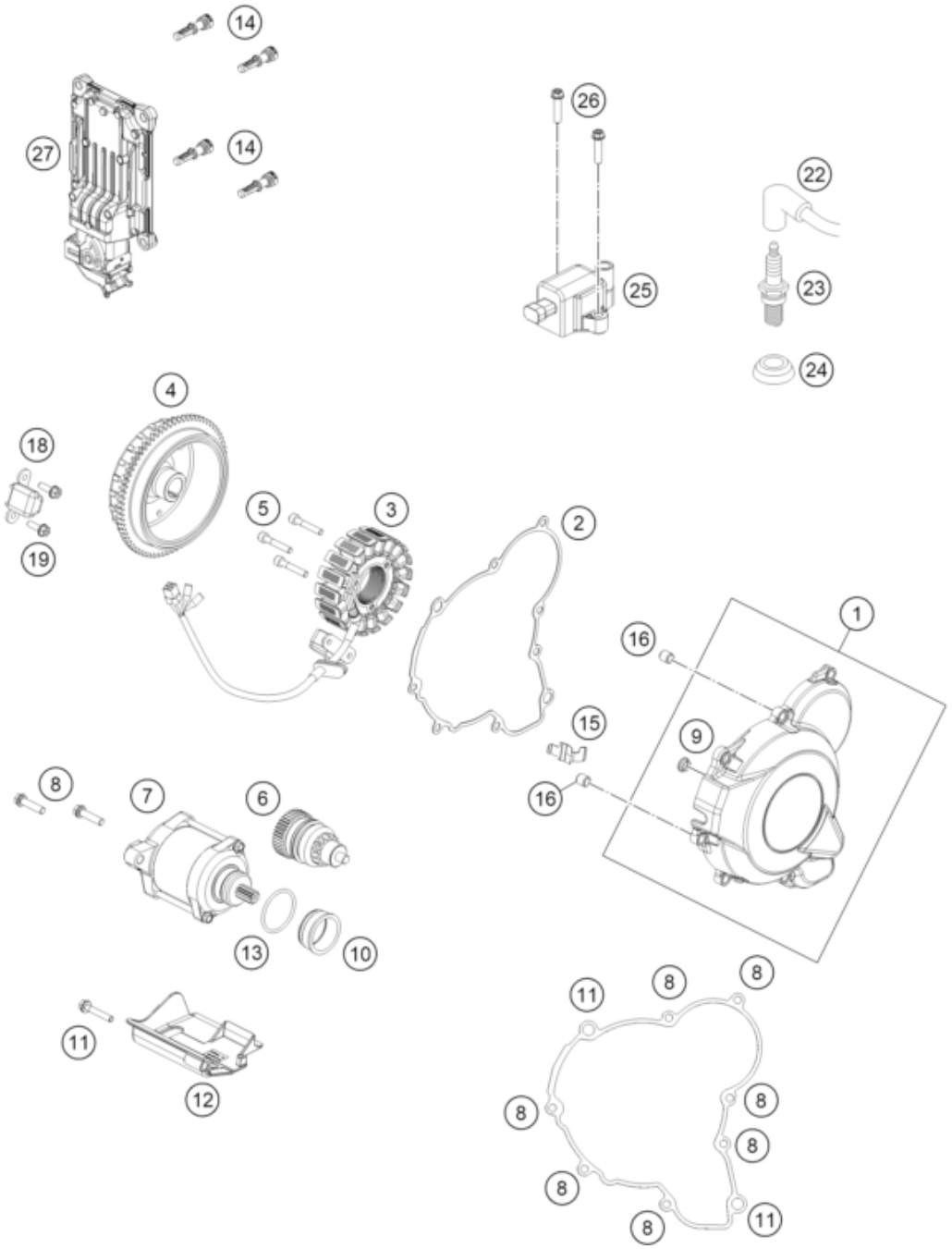

Pos	Part Number	Description	Additional Text	Quantity
1	55530702044JA	Ignition cover TE cmpl.		1.00
2	55430040000	IGNITION COVER GASKET		1.00
3	55439104000	Stator		1.00
4	55439105000	flywhell		1.00
5	0012050303S	Cap head screw DIN 6912 - M5x3		3.00
6	55440126000	BENDIX		1.00
7	55540001000	Starter motor		1.00
8	0025060256	HH collar screw M6x25 TX30		9.00
9	55540031000	Collar bushing		1.00
10	55440012000	BEARING BUSH		1.00
11	0025060306	HH collar screw M6x30 TX30		3.00
12	55440040044	PROTECTION CAP STARTER ENGINE		1.00
13	0770021260	O-RING 34,59X2,62		1.00

14	55641030000	Holder control unit		4.00
15	55439140220	Holding plate generator cable		1.00
16	49030090100	DOWEL 9,8 X7X10		2.00
18	59039034000	pulse generator KOKUSAN 4K3-A/		1.00
19	0025050166	HH collar screw M5x16 TX30		2.00
22	55639007100	Ignition wire		1.00
23	54739093000	SPARK PLUG	MXC, EXC	1.00
24	50231012000	SEALING CUP FOR SPARK PLUG	200	1.00
25	55639006000	Iginition coil		1.00
26	0025060256	HH collar screw M6x25 TX30		2.00
27	55641031000	Control device EFI		1.00