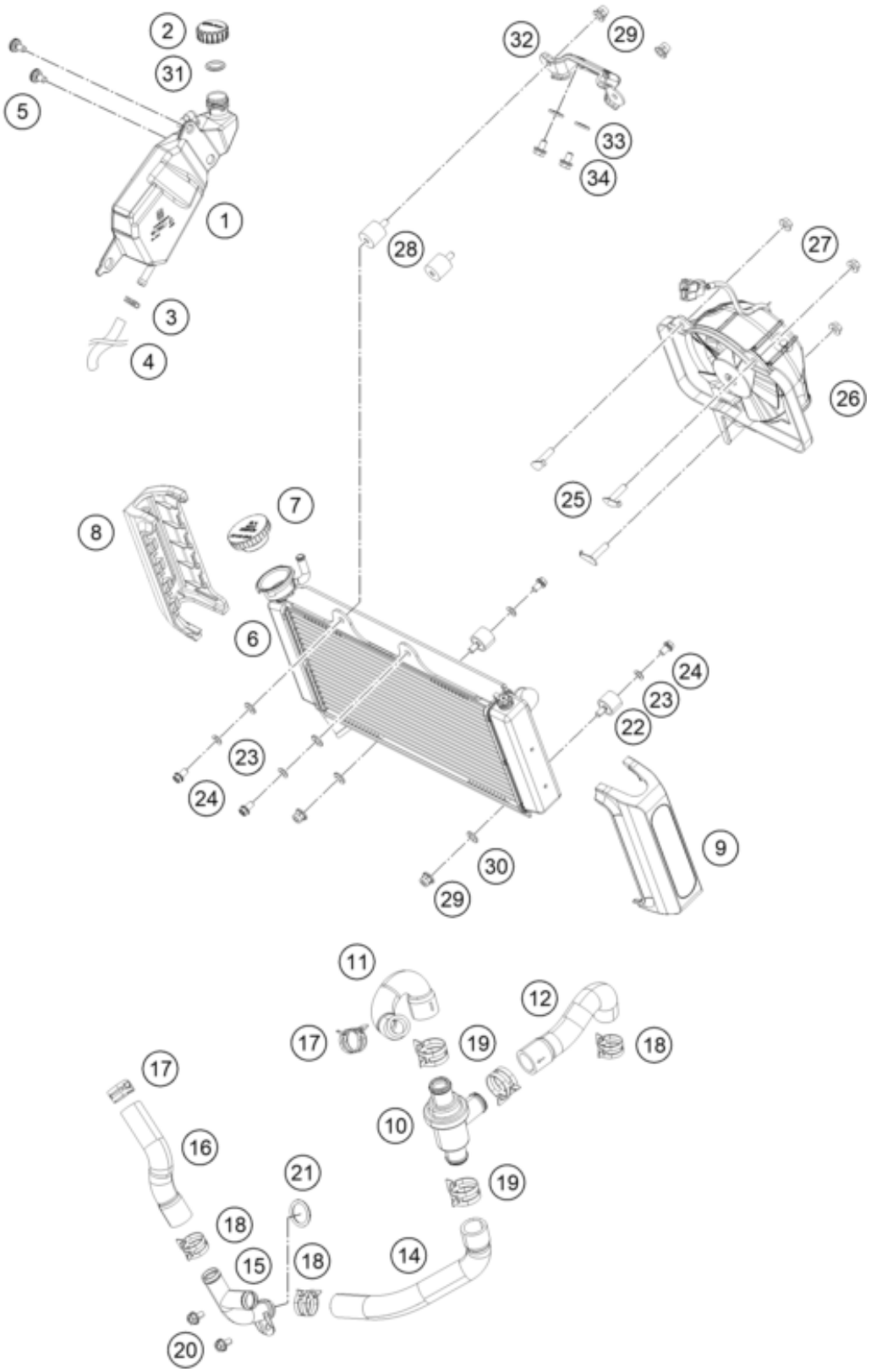

Pos	Part Number	Description	Additional Text	Quantity
1	28635065000	TANK EXPANSION		1.00
2	90135066000	PLUG F. EXPANSION TANK		1.00
3	90107018011	CLAMP 10MM		1.00
4	J600000580000	Hose for reservoir		1.00
5	93008040000	Screw M6X1X13		2.00
6	28235010000	Radiator		1.00
7	90135016100	RADIATOR CAP		1.00

8	28135032000	Radiator cover, right	only for svartpilen	1.00
9	28135031000	Radiator cover, left	only for svartpilen	1.00
10	90135017000	THERMOSTAT		1.00
11	93035024000	Pre-formed hose		1.00
12	93035025000	Pre-formed hose		1.00
14	94335026000	Pipe thermostat-joint t pcs.		1.00
15	90635071033	COOLANT PIPE T		1.00
16	90235024030	pre-formed hose radiator-t-pie		1.00
17	90135020000	HOSE CLAMP D23		2.00
18	90135020001	hose clamp D26		3.00
19	90135020003	HOSE CLAMP D28		3.00
20	J025060141	Hex collar screw M6X14		2.00
21	J770018530	O-RING 18,5X3		1.00
22	90135001001	silentbloc M6		2.00
23	J127060001	Spring ring B6		4.00
24	J025060103	HH COLLAR SCREW M6X10 SW10		4.00
26	93235041033	Fan cpl.		1.00
28	90235001001	silentbloc M6		2.00
29	J926060000	FLANGED NUT M6 WS10 SELF LOCK.		4.00
30	90108015020	WASHER		4.00
31	90102055000	COMPENSATING TANK O-RING		1.00
32	93035004000	Support		1.00
33	J125090006	Washer 9,2X16X2		2.00
34	J025060101	Hexagon screw M6X10		2.00