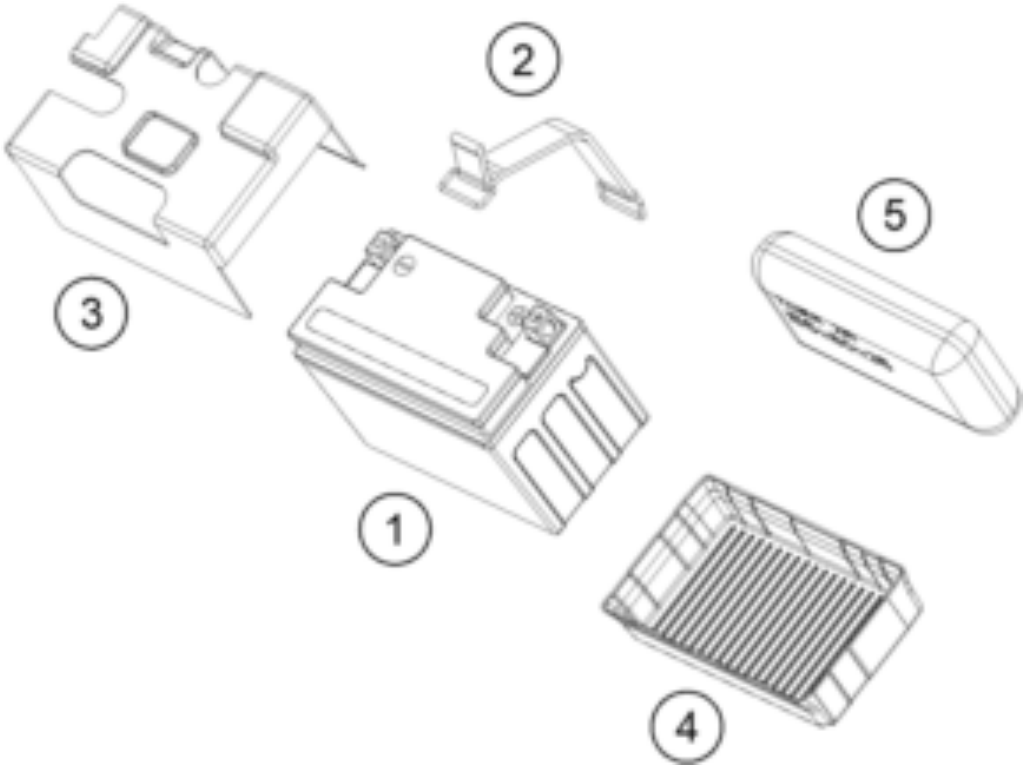

Pos	Part Number	Description	Additional Text	Quantity
1	90611053000	BATTERY 12V/8AH		1.00
2	95811055070	Battery retaining pin top		1.00
3	28111055000	Battery cover, top		1.00
4	28111054050	Battery compartment		1.00
5	28129099000	Tool set		1.00