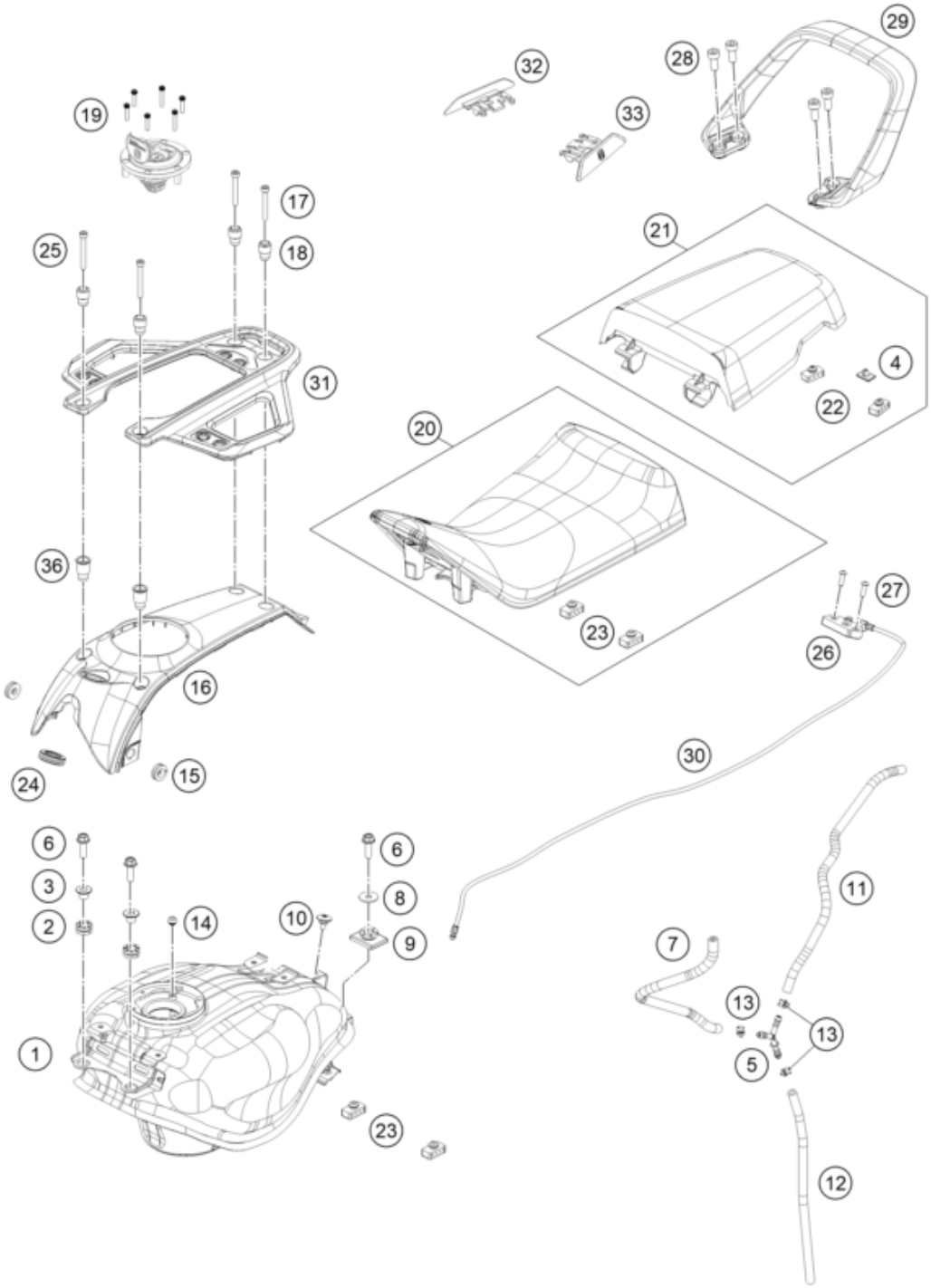

Pos	Part Number	Description	Additional Text	Quantity
1	28107013000	Fuel tank		1.00
2	90507013006	GROMMET TANK MOUNTING		2.00
3	93008034000	Bushing		2.00
4	90507047041	SEAT DUMPER SOZIUS SEAT		1.00
5	90507015000	CONNECTOR Y SHAPE		1.00
6	J025080253	Hexagon screw M8X25		3.00
7	J600000635500	Pipe connector		1.00
8	90111060010	WASHER PLAIN 8,4X25X2		1.00
9	93007014000	Tank guard rear		1.00
10	J031050096	Roundhead screw, M5x9		1.00
11	J600000638500	Pipe tank expansion-connector		1.00

12	J600000629000	Overflow hose, D=6 L=290		1.00
13	J310000801300	Hose clamp 12.5 x 8 SW		3.00
14	28107029010	Rubber cap, ACF tank connectio		1.00
15	28108057020	Rubber bushing spoiler		2.00
16	28108057000KD	HUSKVERNA COVER TOP-DARK GALVA		1.00
17	J900000604501	Hexagon socket screw M6x45		2.00
18	28108057010	Bushing ignition lock cover		4.00
19	J900000501600	SCREW TRUSS M5x16		6.00
20	28107040000	Seat		1.00
21	28107047000	Pillion seat		1.00
22	93007047041	Seat damper		2.00
23	93007040010	Seat cowl pad		4.00
24	28111066010	Rubber grommet, ignition lock		1.00
25	J900000605001	BOLT SOCKET-M6X1XL50XCL10.9XBL		2.00
26	28107050000	Seat lock		1.00
27	90508006003	AH SCREW M6X1X20		2.00
28	J912080186	Bolt socket-M8x1.25Xl18Xcl8.8X		4.00
29	28112008000	Passenger grab handle		1.00
30	28107050010	cable lock seat		1.00
31	28112010033	Baggage carrier compl.		1.00
32	28107055000	Passenger seat cover right		1.00
33	28107055010	Passenger seat cover left		1.00
36	28112010010	Collar bushing baggage carrier		2.00