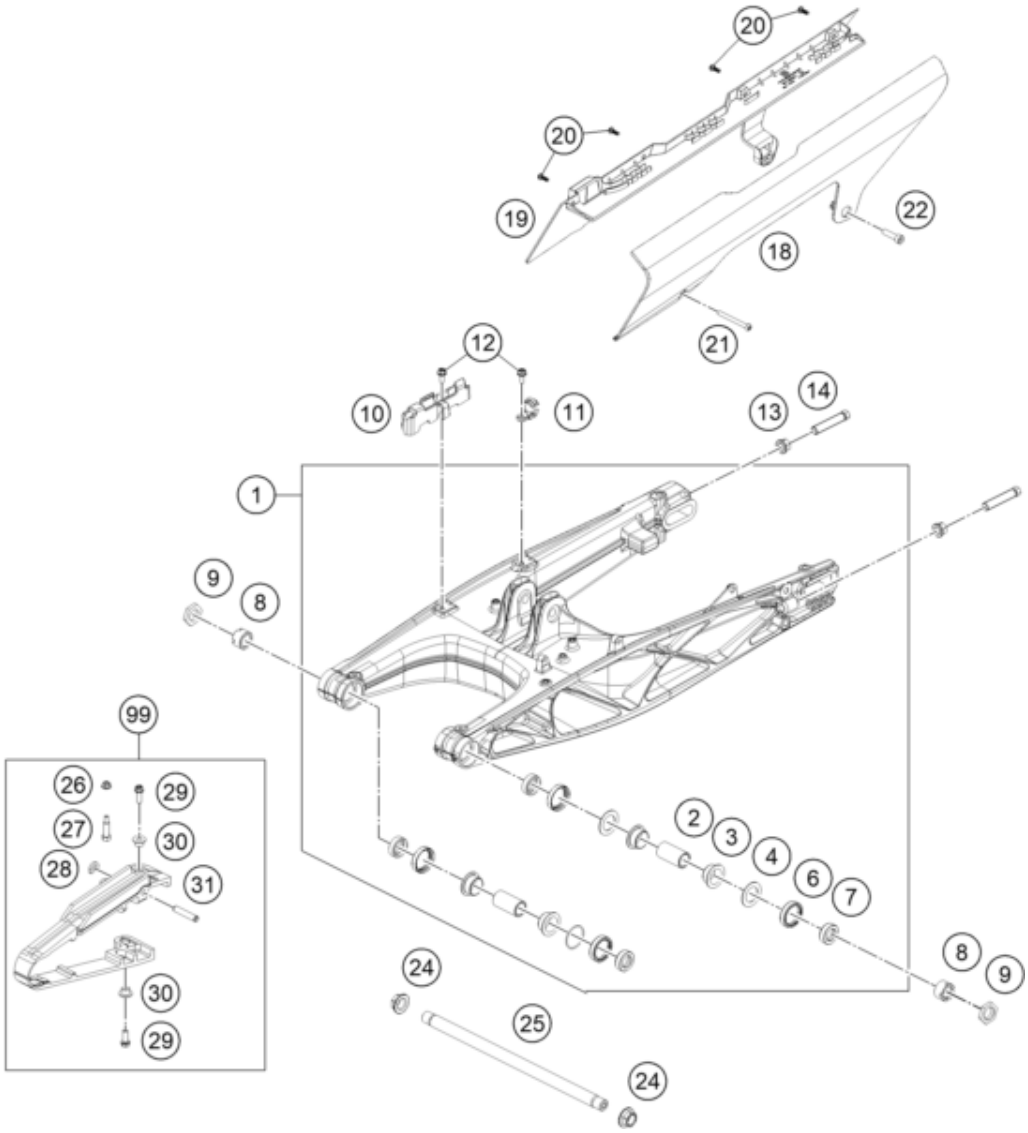

Pos	Part Number	Description	Additional Text	Quantity
1	28104030044C1	Swing Arm Sub Assy Husqvarna 4		1.00
2	90104032000	sleeve bushing 15.1x20x38		2.00
3	90104031000	Igus plain bearing		4.00
4	90104036000	Thrust washer 22.2x31.7x1		2.00
6	90104034001	OIL SEAL RING 25X32X7		4.00
7	90104034000	cup for radial shaft seal		4.00
8	90104046000	swingarm adjusting ring		2.00
9	90104042000	hex thrust washer		2.00
10	93013047000	Support		1.00
11	90113047000	brake hose guide		1.00
12	J011050133	HH COLLAR SCREW M5X13 SW8		2.00
13	90104010002	flanged hex nut M10x1.25 WS13		2.00
14	90104040000	BOLT HEX M10X1.25X50 WS10		2.00
18	28104061000	Chainguard fairing		1.00
19	28104062000	Chainguard		1.00
20	J981420133	SHEET MET.SCR. DIN 7981 4,2X13		4.00
21	93004065000	hexagon socket screw M5X0.8X55		1.00
22	J912060162	Hexagon socket screw, M6X16		2.00

24	90104038000	FLANGED NUT M14X1.5		1.00
25	90104037000	Shaft swing arm L=299mm		1.00
26	90204060001	HH COLLAR NUT		1.00
27	90104040100	screw M5x0.8x30		1.00
28	90504067000	WASHER CHAIN SLIDING GUARD		1.00
29	J025060169	HH COLLAR SCREW M6X16 SW8		2.00
30	90604062000	chain slider bushing		2.00
31	90904070020	SLEEVE CHAIN GUARD		1.00
99	90104066210	CHAIN GUARD KIT 250/390		0.00