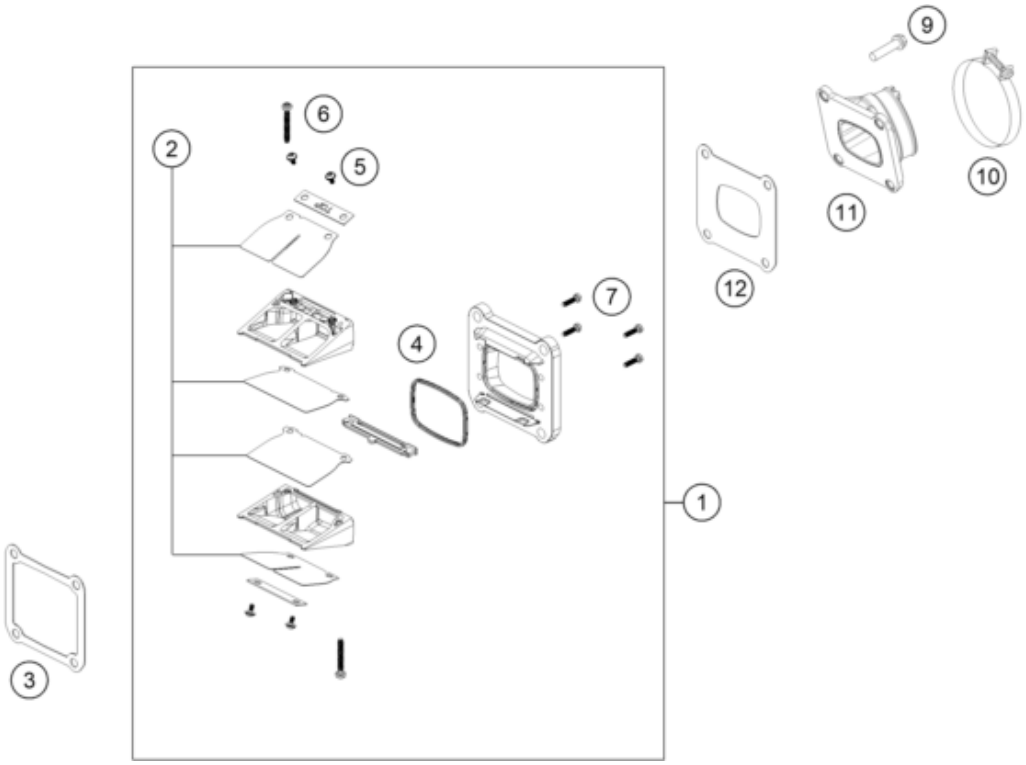

Pos	Part Number	Description	Additional Text	Quantity
1	50530051044	Reed Valve Case cpl.		1.00
2	50530152044	Reed Valve Set		1.00
3	50430098050	GASKET REED VALVE CASE		1.00
4	54830153050	GASKET SUPPORTING PLATE		1.00
5	00810300553	EJOT DELTA PT SCREW 30X5,5		4.00
6	0081035253	EJOT DELTA PT SCREW 35X25		2.00
7	0081030124	EJOT DELTA PT SCREW 30X12		4.00
9	0025060256	HH collar screw M6x25 TX30		4.00
10	54330061000	Hose clip GEMI 52mm		1.00
11	50430050000	INTAKE FLANGE		1.00
12	50430098060	GASKET INTAKE FLANGE		1.00