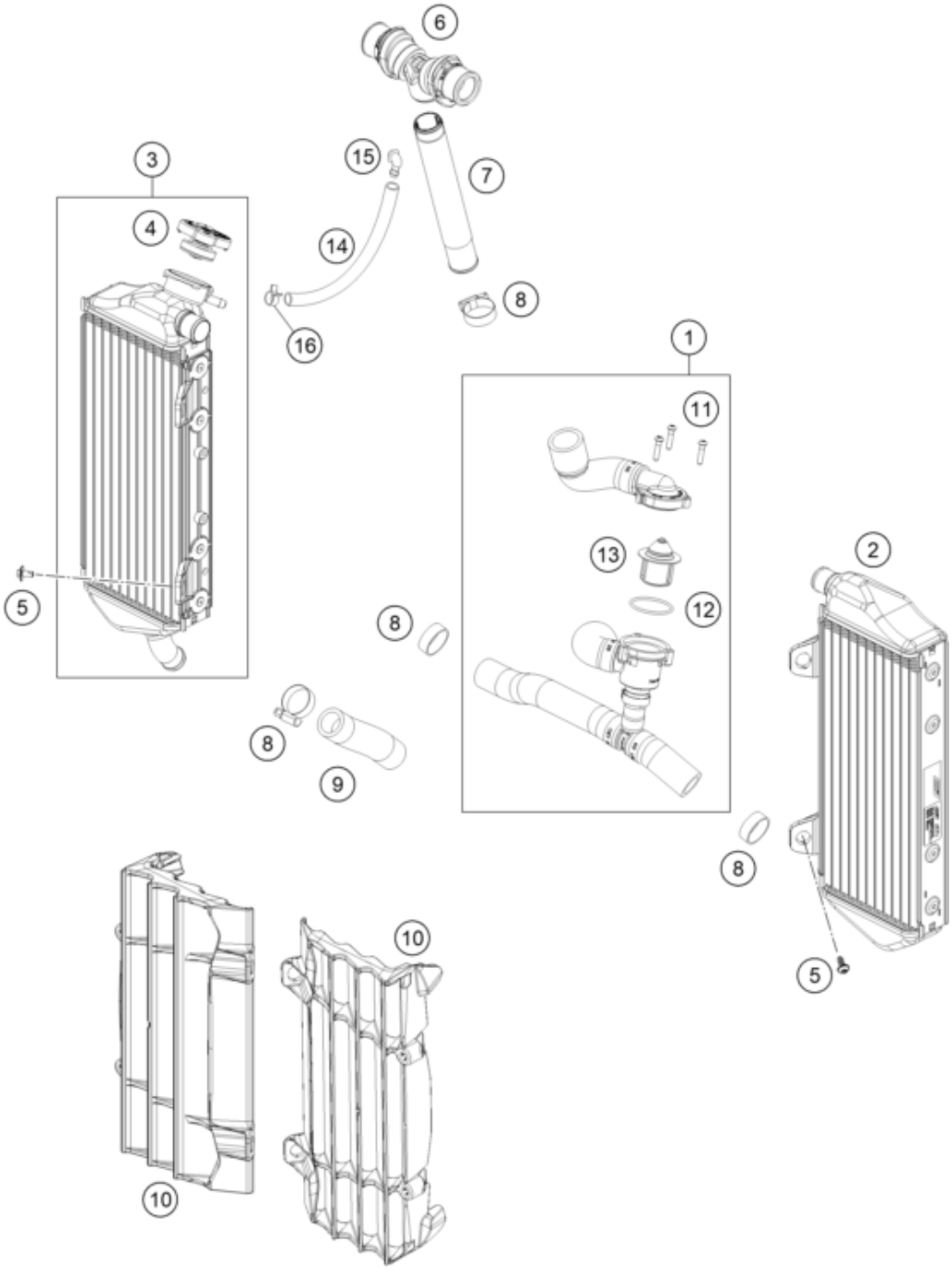

Pos	Part Number	Description	Additional Text	Quantity
1	55735026033	Radiator hose eng. thermos.		1.00
2	50535007100	Radiator, left 19		1.00
3	50535008100	Radiator right		1.00
4	79035016000	RADIATOR CAP 1,8 BAR		1.00
5	0024060123	COLLAR SCREW M6X12 TX	300 TPI Erzbergrodeo	4.00
6	79135071044	Y-hose cpl.		1.00
7	79135073000	threaded bushing		1.00
8	10001020000	HOSE CLAMP GEMI 18-29		6.00
9	55535027000	preformed hose		1.00
10	7913503400030	radiator protector le/ri black		2.00
11	0016040183	SCREW FOR PLASTIC D=4X18		3.00
12	0770320020	O-RING 32,00X2,00		1.00
13	59435017000	THERMOSTAT 70 DEGREE 04		1.00

14	50335030001	PVC-HOSE 6X9		1.00
15	50303089000	ANGLE PIECE '97		1.00
16	59007017000	CLAMP YDNAC 10096F (9,6MM)		1.00