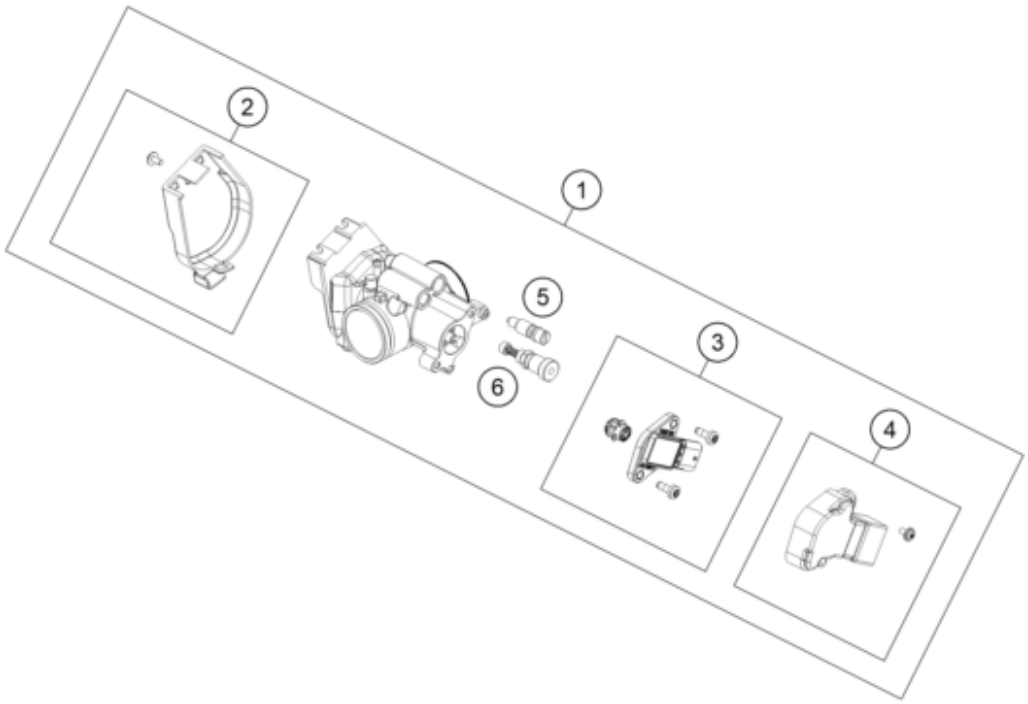

Pos	Part Number	Description	Additional Text	Quantity
1	55741001000	Throttle body	150 XC-W	1.00
2	55641056044	TVB cover cmpl.		1.00
3	55641077044	TPS cmpl.		1.00
4	55641078044	TPS cover cmpl.		1.00
5	55741060000	Idle screw		1.00
6	55741070000	Cold start button		1.00