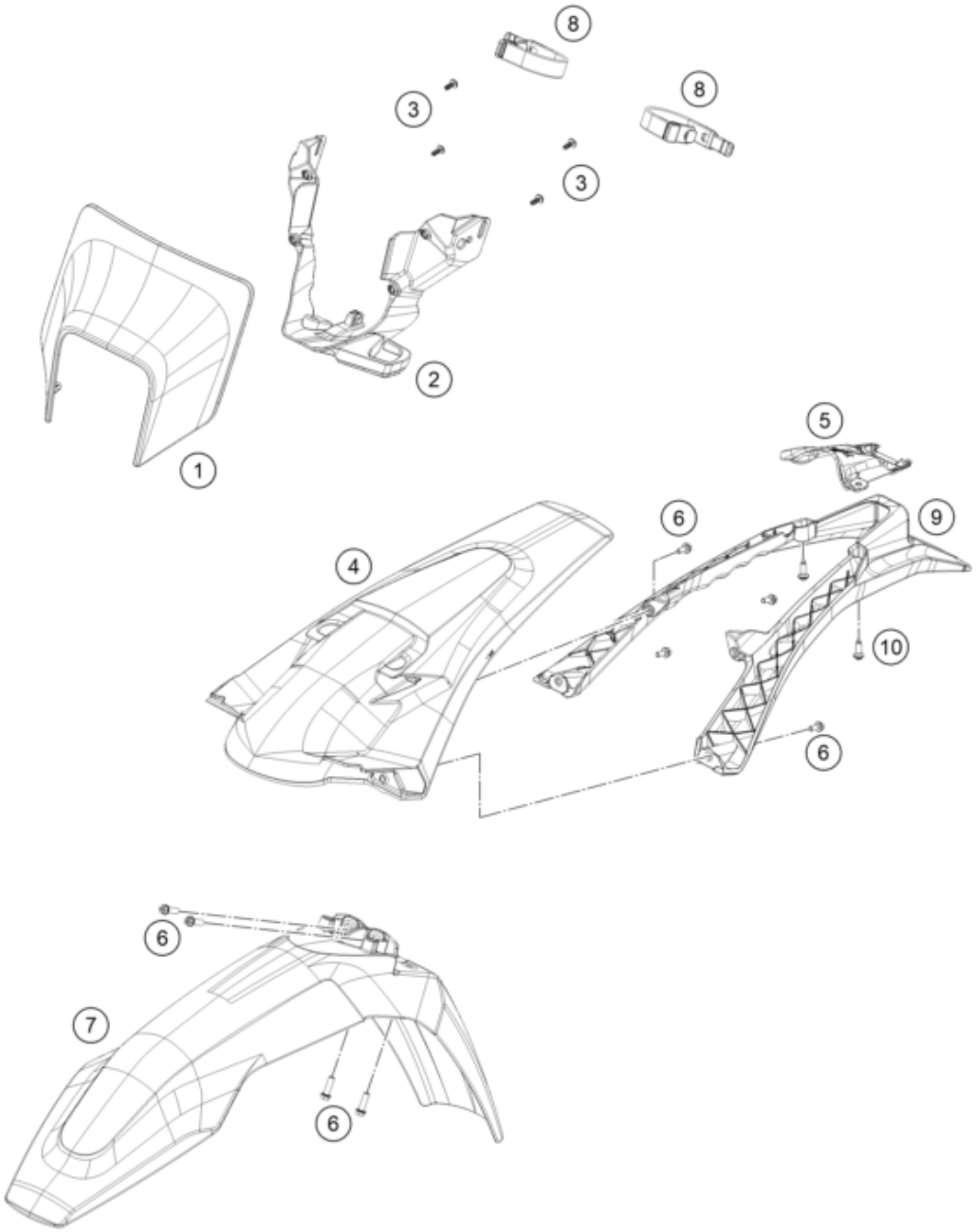

Pos	Part Number	Description	Additional Text	Quantity
1	2500800100028	HEAD LIGHT		1.00
2	26508009000	HEAD LIGHT UNDERPART		1.00
3	0081050121	EJOT PT screw K50x12	only for US and SixDays	4.00
4*	2650801300028A	REAR FENDER TE FE 17	WITH DECAL	1.00
5	26514046000	CARRIER BACKLIGHT		1.00
6	0025060166	HH collar screw M6x16 TX30		8.00
7*	2500801000028D	Front fender	WITH DECAL	1.00
8	78108003000	MASK RUBBER		2.00
9	26508015000	NUMBER PLATE CARRIER EU		1.00
10	0017060205	SCREW FOR PLASTIC K60X20 SW6		2.00

* = New part