ENTHALTEN IM DICHTSATZ MOTOR LC4
INCLUDED IN GASKET-SET ENGINE LC4

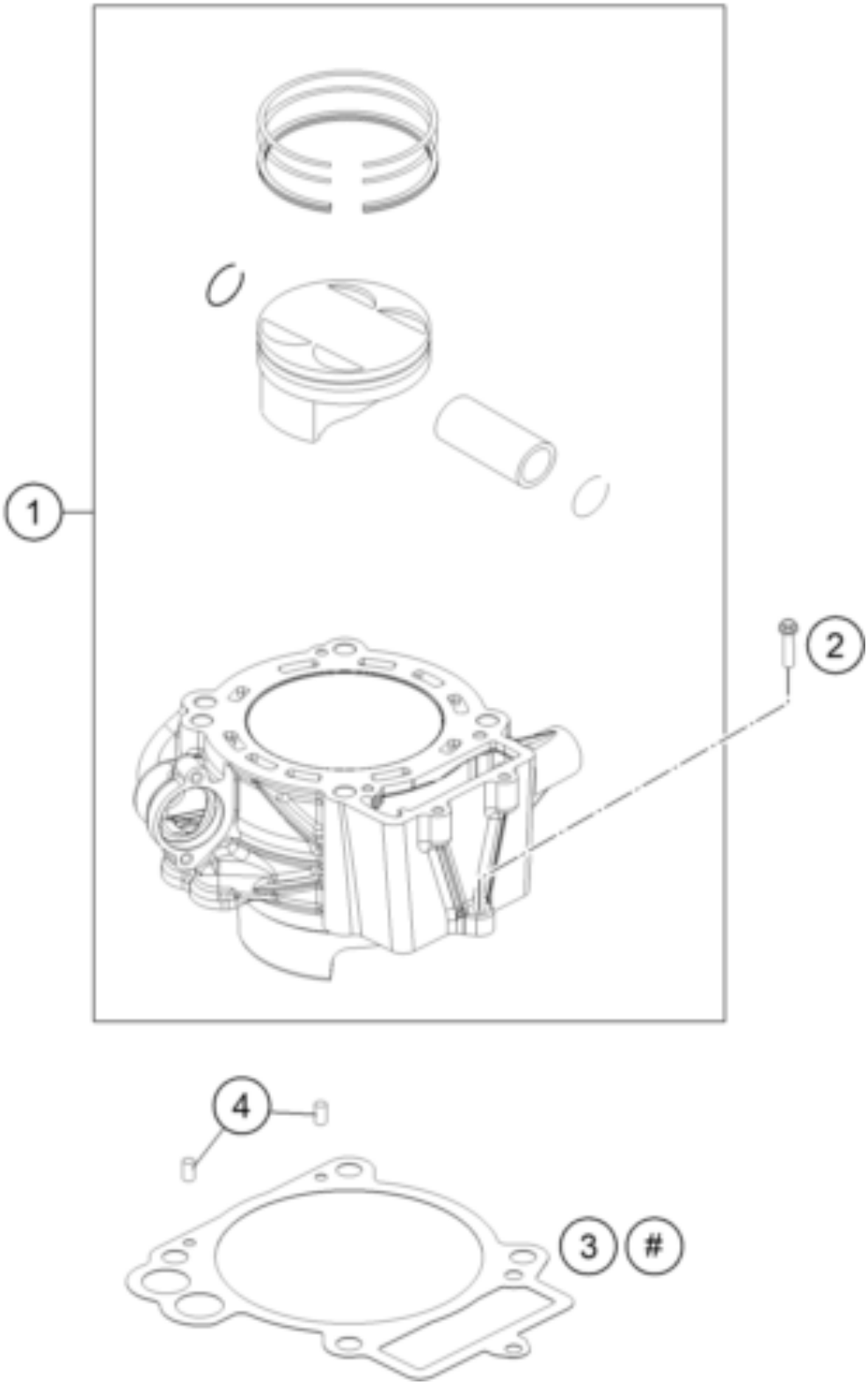

Pos	Part Number	Description	Additional Text	Quantity
1	7663013804433	Cylinder + piston		1.00
2	0025060256	HH collar screw M6x25 TX30		1.00

3	76630135000	Cylinder base gasket		1.00
4	59030023000	dowel sleeve 6x8x11.5		2.00