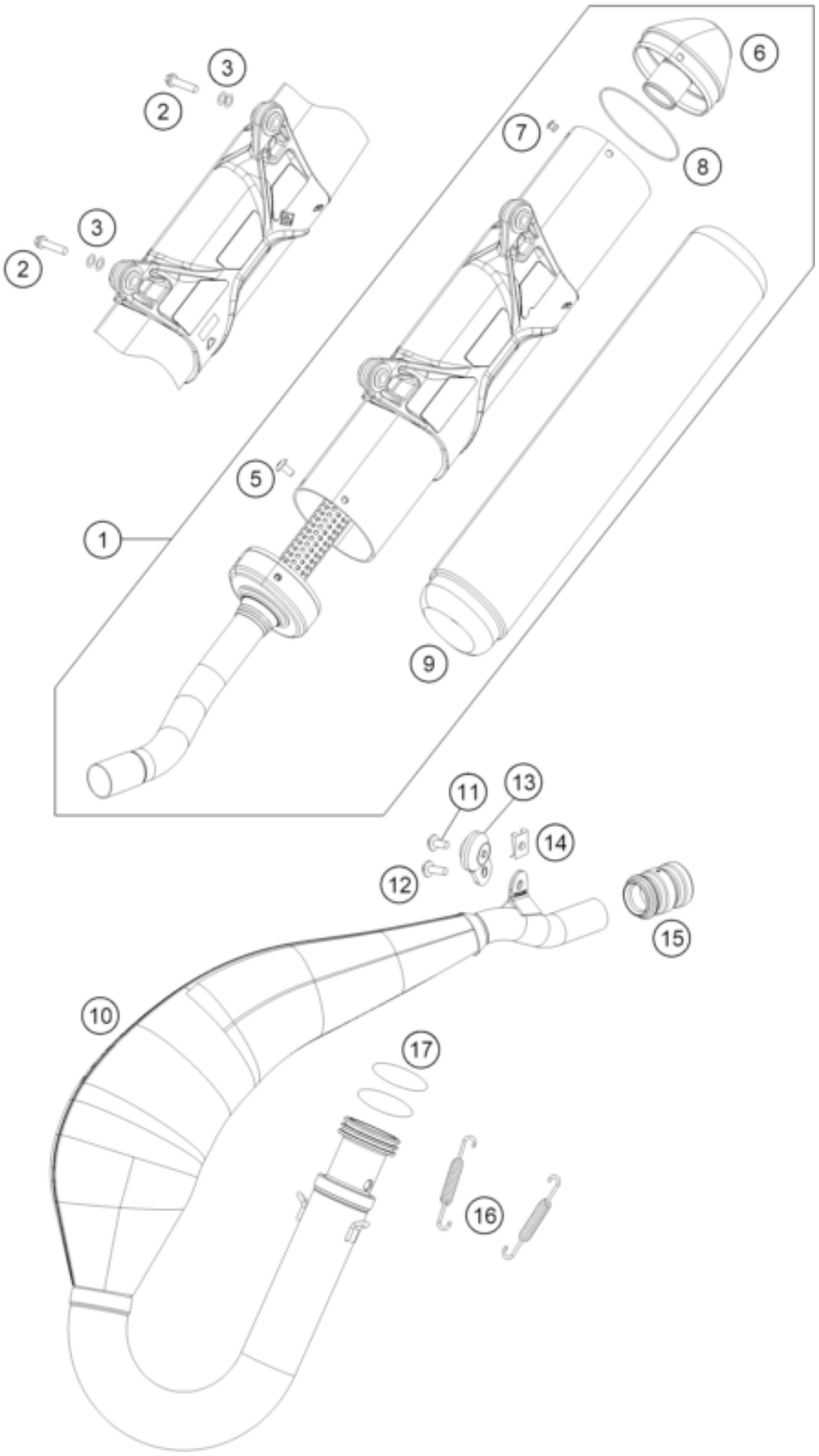

Pos	Part Number	Description	Additional Text	Quantity
1	50405083000	SILENCER 125 EXC		1.00
2	0025060356	HH collar screw M6x35 TX30		2.00

3	50233041000	Pair of washers M6 NORDLOCK		2.00
5	78105081010	SCREW TORX M5X10		4.00
6	50305083260	END CAP CPL.		1.00
7	0011480800	DUMMY RIVET 4,8X 8 NIRO		4.00
8	0770740015	O-RING 74,00X1,50 FKM 75SH		1.00
9	54805078265	ROCK WOOL 265G		1.00
10	50405007100	EXHAUST PIPE		1.00
11	0024060106	HH COLLAR SCREW M6X10 TX30		2.00
12	0024060156	HH collar screw M6x15 TX30	ONLY USA	2.00
13	50305012000	Silent block for exhaust pipe		2.00
14	54603048100	clip nut M6		2.00
15	54605057000	RUBBER SLEEVE D=21MM/23MM '93	125/200 SX, 125 EXC	1.00
16	50305016000	TEN.SPRING L=62MM EY.MOVEABLE		2.00
17	0770380030	O-ring 38x3 VITON		2.00