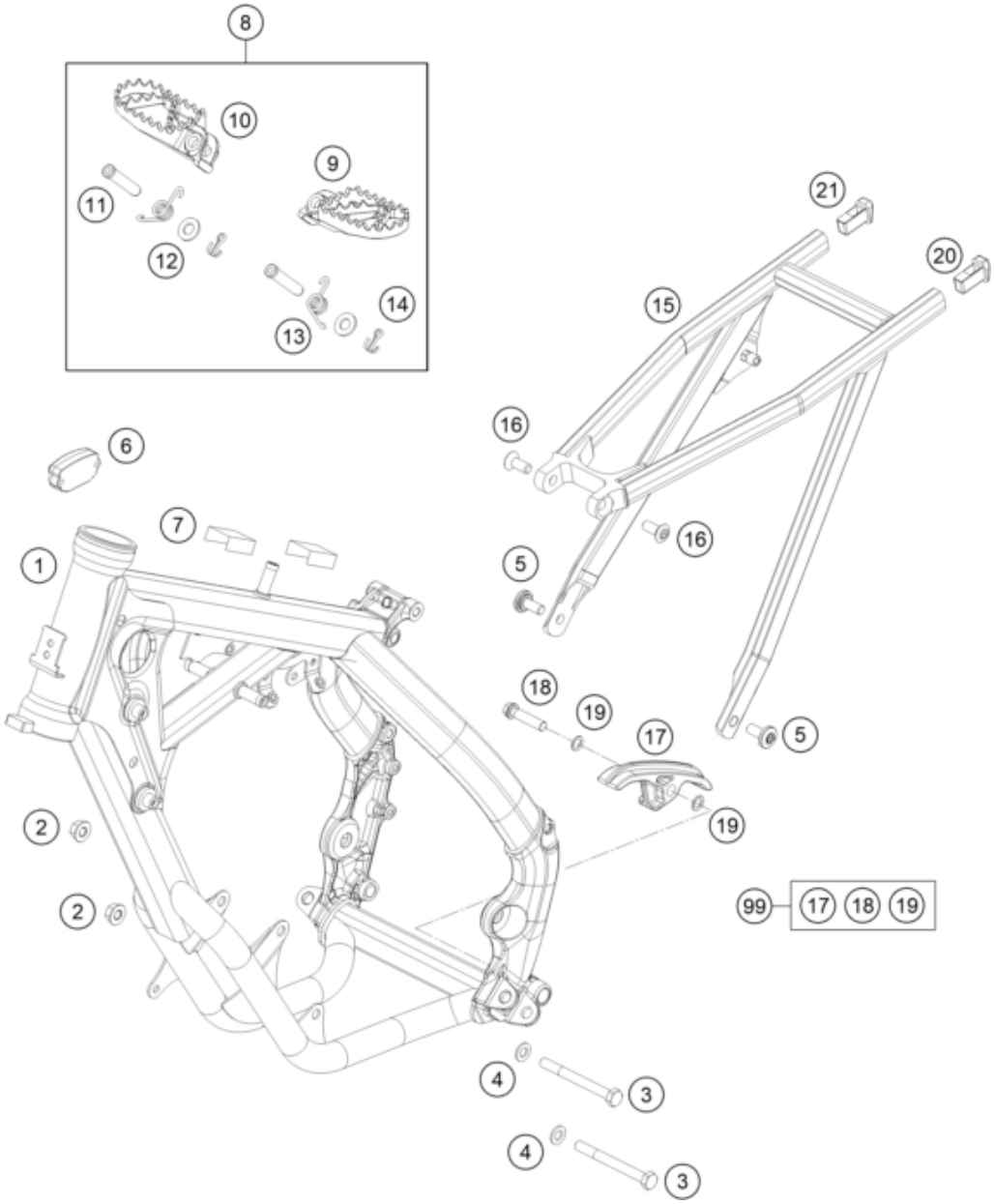

Pos	Part Number	Description	Additional Text	Quantity
1	4630300100028	Frame "463P3" white		1.00
2	06923080003	Hex. nut DIN EN 1661 M8 WS13		2.00
3	0931080805S	HH SCREW DIN931 M8X80 SS		2.00
4	0125080003	washer DIN 125 A -8.4		2.00
5	79003003000	Special screw M8X18 TORX45 SL		2.00
6	81312920000	HOUR METER HQV		1.00
7	50307012000	ADH. FOIL TRANSP. 80X80 MM 04		2.00
8	47103040033	FOOTREST CPL. 14		1.00
9	47103040000	FOOTREST L/S		1.00
10	47103041000	FOOTREST R/S		1.00
11	54803044000	PIN FOR FOOT PED 51.5X9.8 MM	FE	2.00
12	0125100003	washer DIN 125 A 10.5	ONLY FOR 640 DUKE	2.00
13	54603041000	FOOTREST SPRING L/S & R/S		2.00
14	0094032253	PIN DIN0094-3,2X25 STEEL		2.00
15	46303002000	SUBFRAME 65SX 2016		1.00
16	0019080206S	FLAT HEAD SCREW M. ISA45 M8X20		2.00

17	77303053000	Chain sliding piece, bottom		1.00
18	0025080356	HH collar screw M8x35 TX40		1.00
19	36003014000	LOCK WASHER 8MM		2.00
20	78103002010	SUB FRAME APPLICATION LEFT		1.00
21	78103002020	SUB FRAME APPLICATION RIGHT		1.00
99	77303053110	CHAIN SLIDING KIT BELOW 09-15		1.00