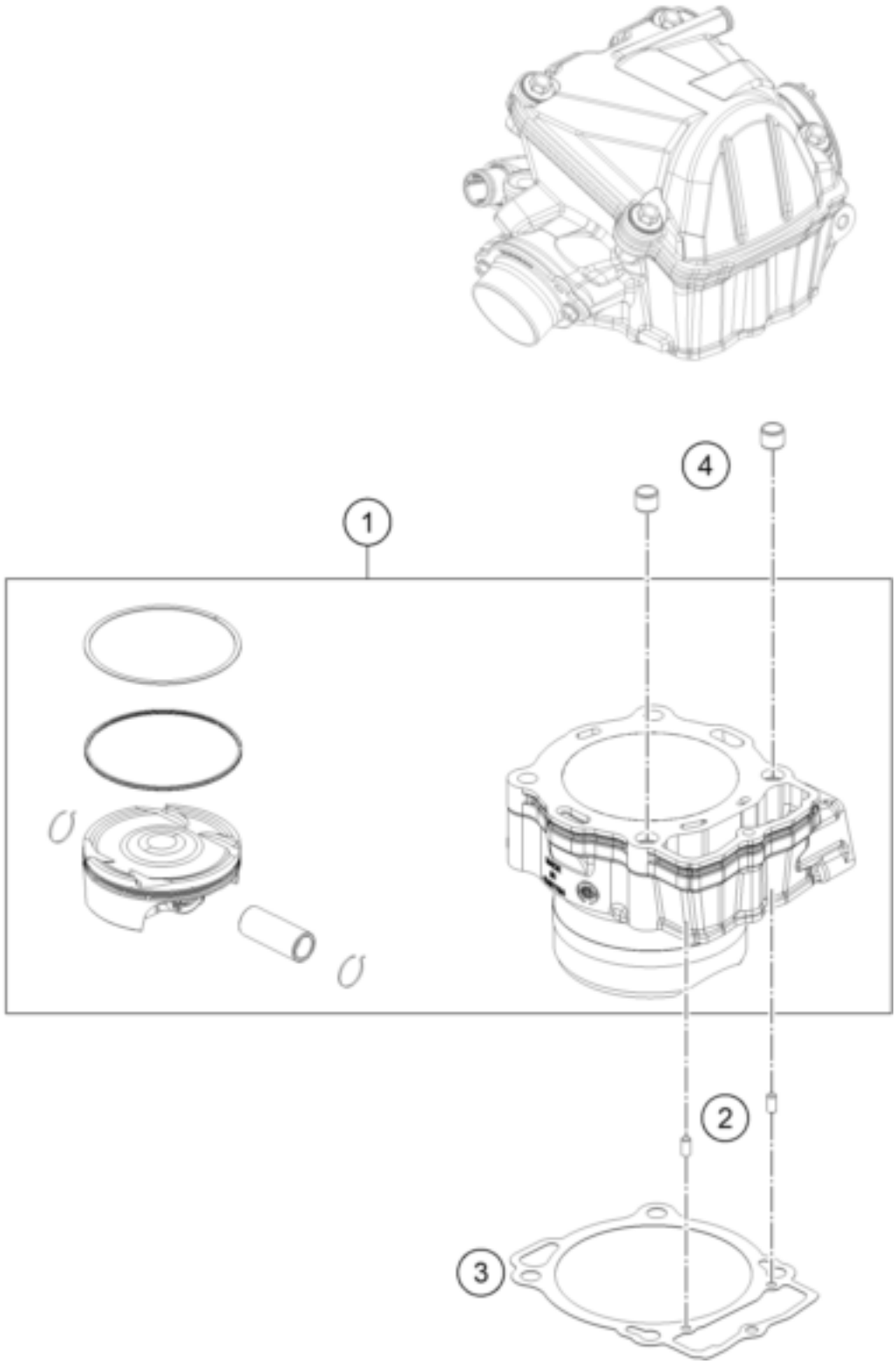

Pos	Part Number	Description	Additional Text	Quantity
1	79630038000	CYLINDER AND PISTON CPL.		1.00
2	0402050980	needle roller DIN 5402 5x9.8		2.00
3	79430035000	CYLINDER BASE GASKET		1.00
4	58530014100	dowl sleeve 10.2x12.5x10		2.00