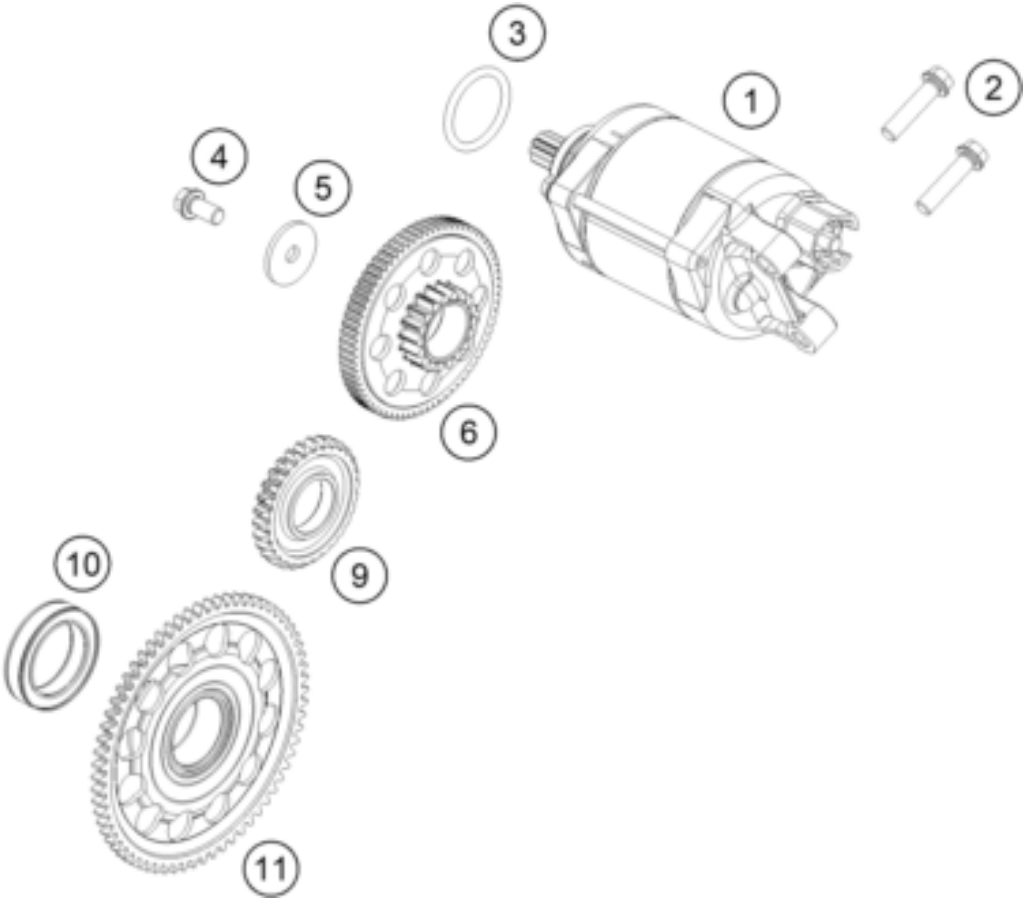

Pos	Part Number	Description	Additional Text	Quantity
1	79440001000	E-STARTER CPL. 0.5KW		1.00
2	0025060256	HH collar screw M6x25 TX30		2.00
3	0770250030	O-RING 25,00X3,00 NBR 70		1.00
4	0025060126	HH collar screw M6x12 TX30		1.00
5	78040016004	STOP DISC 6X23X2		1.00
6	79440016000	TORQUE LIMITER CPL.		1.00
9	79440022030	IDLER WHEEL 30T		1.00
10	75040026000	FREE WHEEL		1.00
11	79440020033	FREEWHEEL SPROCKET CPL.		1.00