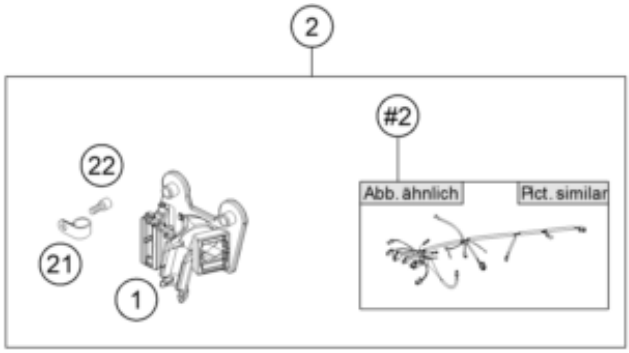

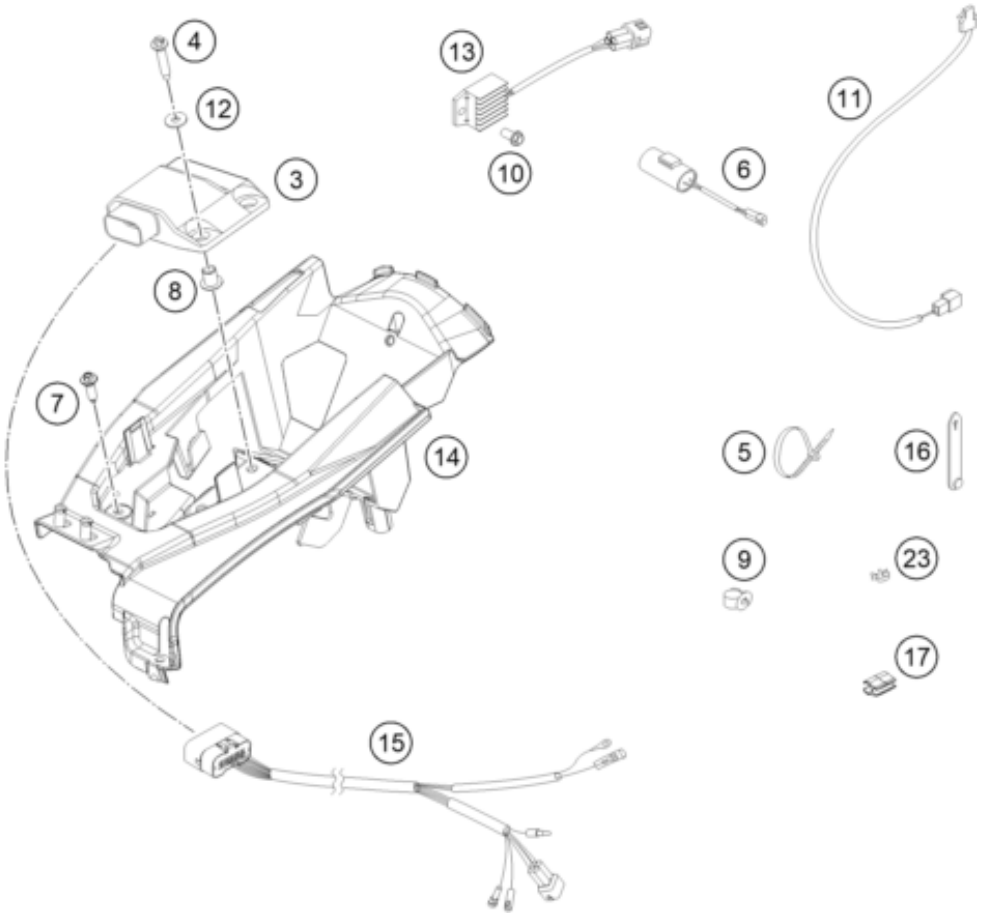

Pos	Part Number	Description	Additional Text	Quantity
1	77711083000	SUPPORT BRACKET		1.00
2	50311175000	WIRING HARNESS 125 EXC CPL. 14		1.00
3	50439131000	ELEKTRONIC BOX 125 EXC 17		1.00
4	0017060305	Special screw K60X30 WS=6		2.00
5	44011076140	CABLE TIE 140/2,5MM BLACK		0.00
5	44011076200	Cable tie 200/4.6mm black		0.00
5	44011076305	CABLE TIE 300/4,8MM BLACK		0.00
6	50311035000	CONDENSATOR 2200MF ADP-48 2000	250/300/380 EXC EU, AUS	1.00
7	0017060206	SCREW F. PLASTIC K60X20AL SW6		1.00
8	60308006000	COLLAR BUSHING 6,2X9,2X15X12,5		2.00
9	58111076000	CABLE SUPPORT KHS NR.150-47610		1.00
10	0023060123	COLLAR SCREW M6X12 TX		1.00

11	50311050100	BRAKE LIGHT SWITCH FRONT 2002	LC4 ENDURO	1.00
12	0021050003	washer DIN 9021 A - 5.3		2.00
13	80011034000	VOLTAGE REGULATOR 04	300 EXC USA	1.00
14	25011055100	BATTERY BOX		1.00
15	54839032200	WIRING HARNESS FOR CDI 2-ST.07		1.00
16	60011093075	RUBBER CABLE TIE 75MM 03		0.00
17	54813026000	CABLE SUPPORT 10/6MM 06		2.00
21	57013070000	PVC-CLAMP 7/16" HEYCO 3377		1.00
22	0912050083	SHCS DIN 912 M5x8		1.00
23	57013072000	WIRING HOLDER 12MM		0.00
23	57013072100	WIRING HOLDER 16MM		1.00