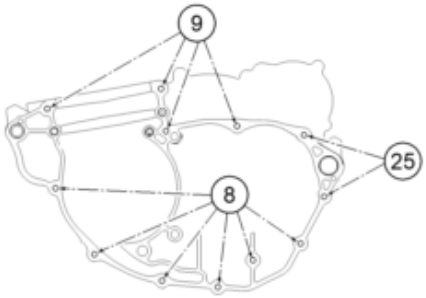

1

2 3 4 5 6 7 10 11
12 13 14 15 16 17 18 19
20 21 22
23 24

8x 0019 050106,
5x 590.30.196.000,
1x 0018 050103,
1x 0912 060163
1x 0912 060404,
6x 750.30.085.000,
1x 780.33.132.000,
1x 590.33.018.000,
1x 590.40.028.000,
1x 770.38.013.100,
1x 772.38.061.050,
1x 772.33.088.000,
1x 800.30.058.060

+ WELLENDICHTRINGE / SEAL RINGS

1x 0760 324571,
1x 0760 405560,
1x 0760 142460

+ LAGER / BEARINGS

2x 773.30.082.200,
2x 546.32.095.000,
1x 772.30.058.000, 0625 160041,
490.30.023.000, 0625 618050,
0625 062054, 0625 062035

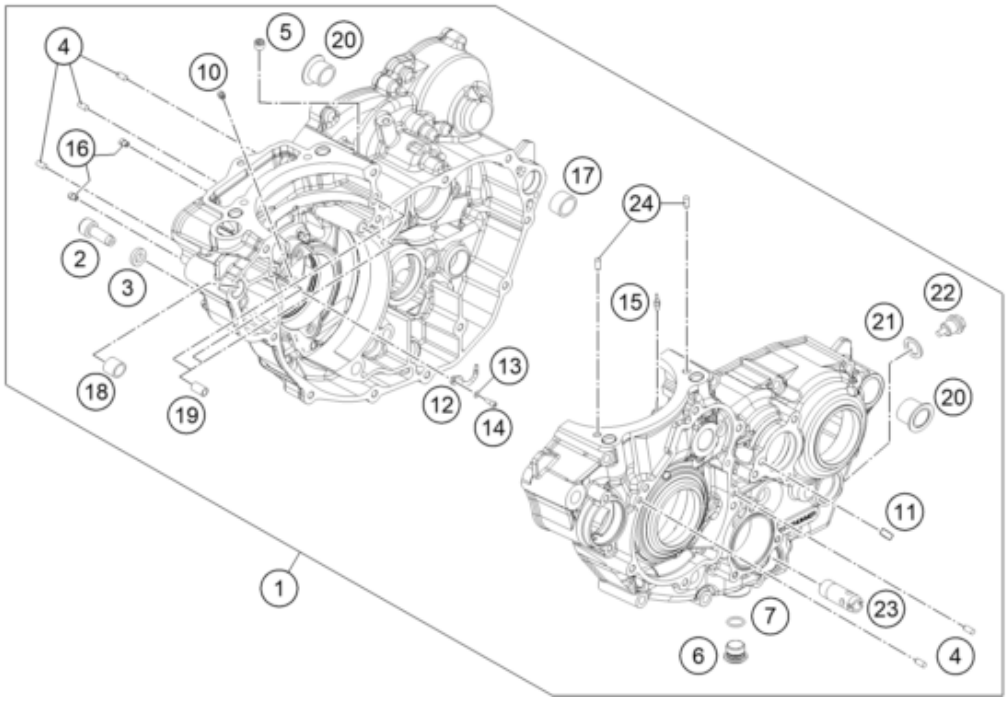

Pos	Part Number	Description	Additional Text	Quantity
1*	77730000244	ENGINE CASE CPL. 350		1.00
2	58030080000	LOCATING SCREW M8 L=23	450/525 MXC, EXC	1.00
3	58030081000	CU-SEAL RING 8 X 14 X 3		1.00
4	0402040980	Needle roll.DIN5402 NRB 4X9.8		5.00
5	0906100100	pipe plug DIN 906 M10x1		1.00
6	78036081000	HOLDING BOLT M14X1,5		1.00
7	0770110015	O-ring 11x1.5 VITON		1.00
8	0025060556	HH collar screw M6x55 TX30		6.00
9	0025060656	HH COLLAR SCREW M6X65 TX30		4.00
10	80030058060	OIL JET "60" M4		1.00
11	77230066000	THROTTLE M5X10X0,5		1.00

12	77830064050	OIL JET CURVED " 50 "		1.00
13	0770035020	O-RING 3,5X2,00 NBR		1.00
14	0912040103	AH.SCREW DIN0912-M 4X10		1.00
15	60030063050	oil jet 50 M5		1.00
16	59030058000	JET 100 BING(44-031/180) M4		2.00
17	59030024000	DOWEL 17 X 19 X 12		1.00
18	54630027000	DOWEL BUSHING 13,8X11X12		1.00
19	59030023000	dowel sleeve 6x8x11.5		3.00
20	75030010100	CASE BUSH		2.00
21	58038022000	CU-seal ring DIN7603-12X18X1.5		1.00
22	58030021000	OILDRAIN PLUG W.MAG. M 12X1,5		1.00
23	77038022000	OIL INTAKEPIPE		1.00
24	0402050080	CYLINDER ROLLER ZRO 5X8		2.00
25	0025060856	HH COLLAR SCREW M6X85 TX30	ONLY FOR CASE 77230000144	2.00
60	77830099000	GASKET SET 350 SX-F		1.00

* = New part