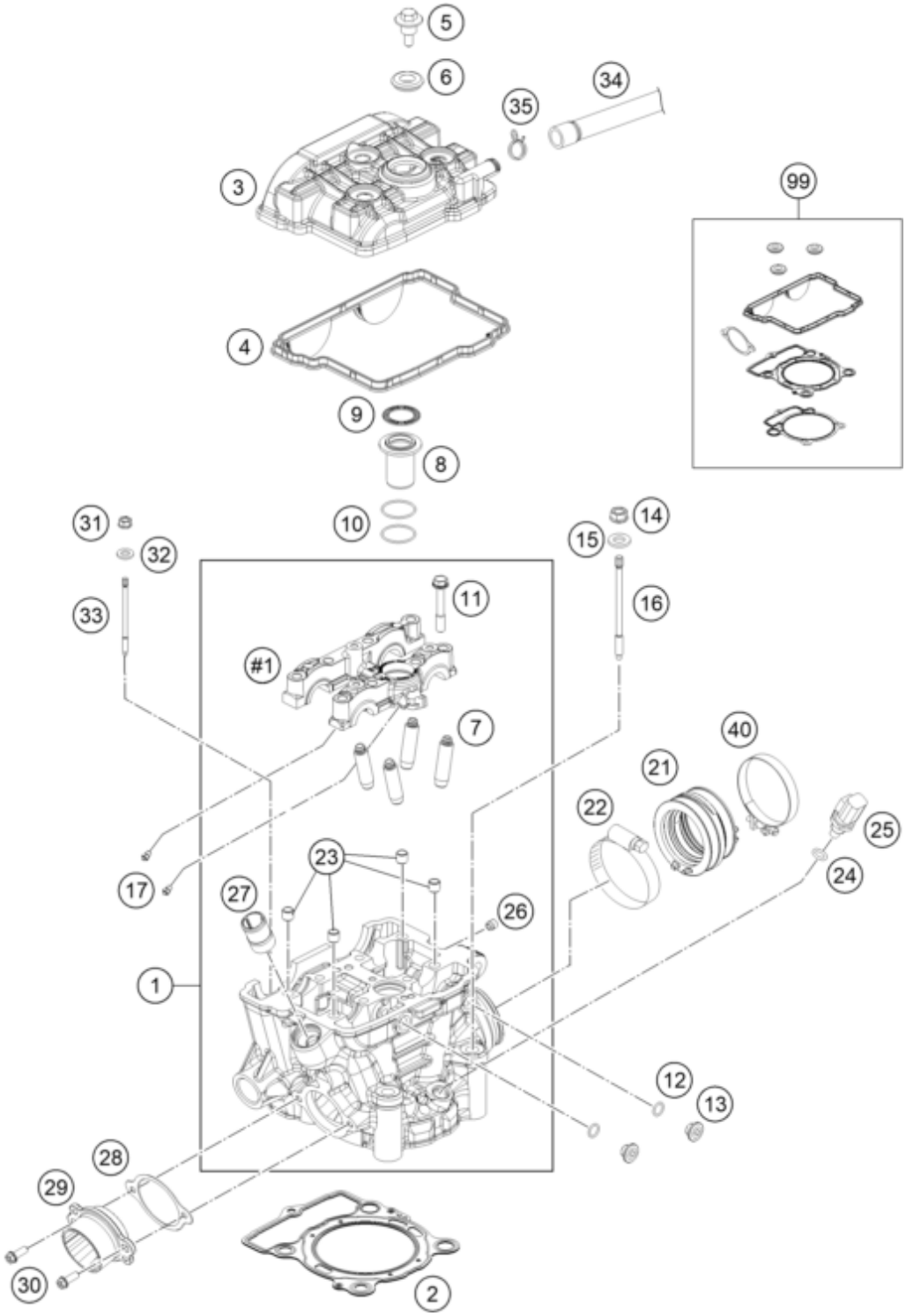


| Pos | Part Number | Description | Additional Text | Quantity |
|---|---|---|---|---|
| 1 | 77736220044 | CYLINDER HEAD CPL. | | 1.00 |
| 2 | 77730036085 | CYLINDER HEAD GASKET | | 1.00 |
| 3 | 77736052000DA | VALVE COVER | | 1.00 |
| 4 | 77736053000 | VALVE COVER GASKET | | 1.00 |
| 5 | 77336054150 | VALVE COVER SCREW | | 3.00 |
| 6 | 77036054150 | RUBBER GASKET FOR SCREW | | 3.00 |
| 7 | 77136026001 | VALVE GUIDE OUTLET | | 4.00 |
| 8 | 77736075000 | INSERT SPARK-PLUG SHAFT | | 1.00 |
| 9 | 77336053050 | GASKET SPARK-PLUG SHAFT | | 1.00 |
| 10 | 0770260015 | O-RING 1,5x26 | | 2.00 |

| | | | | |
|---|---|---|---|---|
| 11 | 77330067142 | HH COLLAR SCREW M7X1X42 | | 8.00 |
| 12 | 07700900151 | O-RING 9x1,5 V80 SH | | 2.00 |
| 13 | 77236080000 | SCREW PLUG | | 2.00 |
| 14 | 77336088210 | COLLAR NUT M10X1,25 SW13 | | 4.00 |
| 15 | 77336089010 | washer 19x10.5x2.5 | | 4.00 |
| 16 | 77230044000 | STUD SCREW M10X1,25 | | 4.00 |
| 17 | 60030063050 | oil jet 50 M5 | | 4.00 |
| 21 | 77236044000 | CONNECTION RUBBER EFI | | 1.00 |
| 22 | 61036047000 | Hose clamp GEMI 63mm 05 | | 1.00 |
| 23 | 77036090000 | DOWEL(BUSH BRIDGE)7/9/8 05 | | 4.00 |
| 24 | 0770100020 | o-ring 10.00x2.00 silicone | ONLY FOR LC4 ADVENTURE | 1.00 |
| 25 | 60011252000 | TEMPERAT.-SENSOR WATER LC8 02 | ONLY FOR LC4 ADVENTURE | 1.00 |
| 26 | 59030296000 | SCREW PLUG | | 1.00 |
| 27 | 58030010200 | SCREW IN NOZZLE M20X1,5 | | 1.00 |
| 28 | 77236041000 | GASKET EXHAUST FLANGE | | 1.00 |
| 29 | 77736039000 | ENGINEFLANGE | | 1.00 |
| 30 | 0025060166S | HH collar screw M6x16 TX30 SL | | 2.00 |
| 31 | 77336088106 | COLLAR NUT M6X1 SW8 | | 1.00 |
| 32 | 0125060003 | WASHER DIN0125-A 6,4 | | 1.00 |
| 33 | 77330043000 | STUD SCREW M6 | | 1.00 |
| 34 | 77538087000 | ENGINE BREATHER TUBE | | 1.00 |
| 35 | 58431082300 | CLAMP YDNAC 10173 (18MM) | | 1.00 |
| 40 | 77236048000 | Hose clip GEMI 58 | | 1.00 |
| 99 | 77730097000 | GASKET KIT CYL. 250 SX-F/EXC-F | | 0.00 |