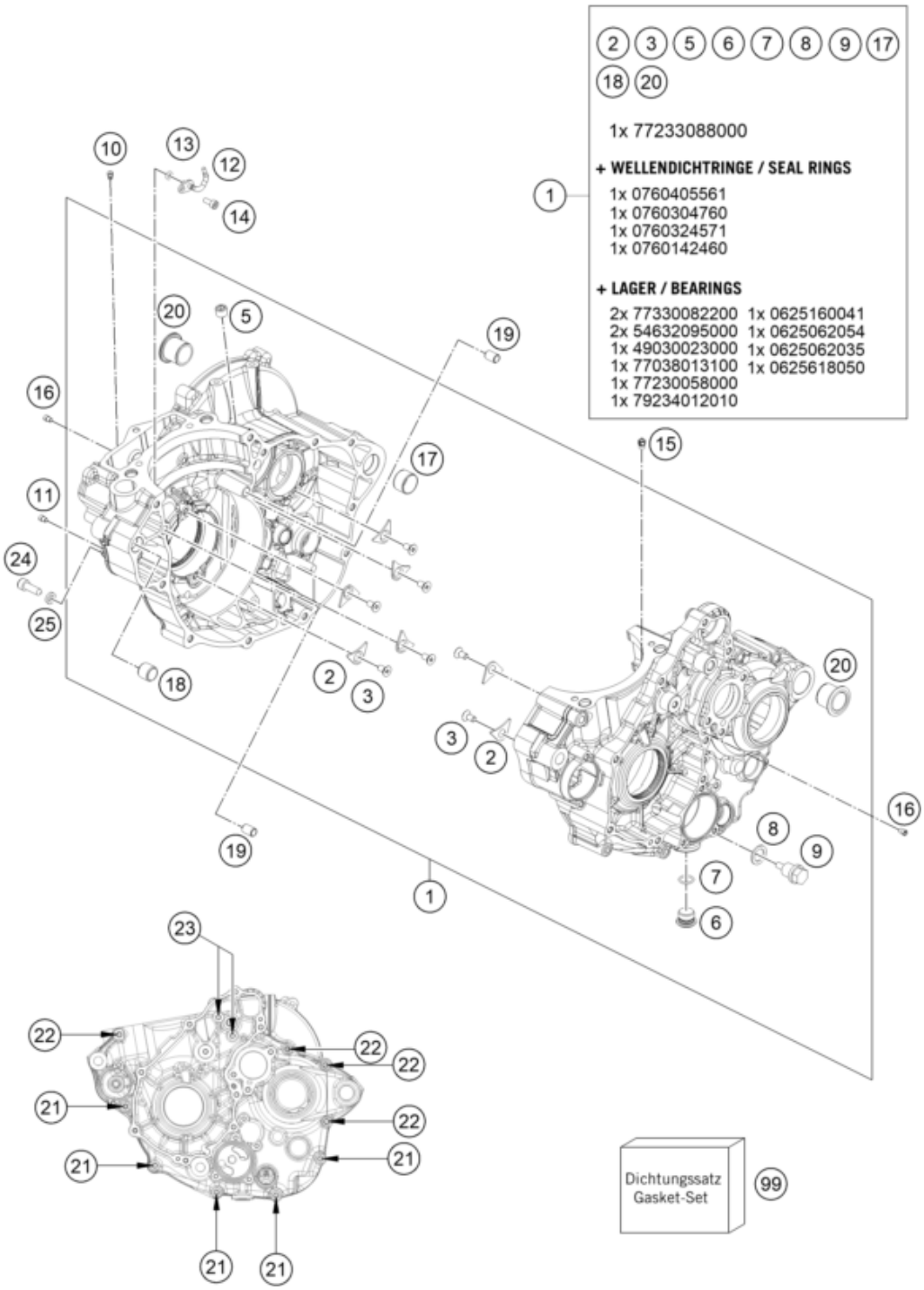

Pos	Part Number	Description	Additional Text	Quantity
1*	79230000033	ENGINE CASE CPL.		1.00
2	75030085000	RETAINING PLATE F. CS BEARING		7.00
3	0019050121S	INT. TORX FLAT HEAD M5X12 T25		7.00
5	0906100100	pipe plug DIN 906 M10x1		1.00
6	78036081000	HOLDING BOLT M14X1,5		1.00
7	0770110015	O-ring 11x1.5 VITON		1.00
8	58038022000	CU-seal ring DIN7603-12X18X1.5		1.00
9	58030021000	OILDRAIN PLUG W.MAG. M 12X1,5		1.00
10	80030058060	OIL JET "60" M4		1.00
11	77030058150	JET 44-031/150		1.00
12	81230164050	OIL JET ANGLED 50		1.00

13	0770035020	O-RING 3,5X2,00 NBR		1.00
14	0912040103	AH.SCREW DIN0912-M 4X10		1.00
15	60030063050	oil jet 50 M5		1.00
16	59030058000	JET 100 BING(44-031/180) M4		2.00
17	59030024000	DOWEL 17 X 19 X 12		1.00
18	54630027000	DOWEL BUSHING 13,8X11X12		1.00
19	59030023000	dowel sleeve 6x8x11.5		2.00
20*	79230010000	Housing bush		2.00
21	0025060556	HH collar screw M6x55 TX30		5.00
22	0025060656	HH COLLAR SCREW M6X65 TX30		4.00
23*	0025060706	HH COLLAR SCREW M6X70 TX30		2.00
24	77730080000	LOCATING SCREW M8 L=25		1.00
25	58030081000	CU-SEAL RING 8 X 14 X 3		1.00
99	79230099000	GASKET KIT ENGINE 250 SX-F		1.00

* = New part