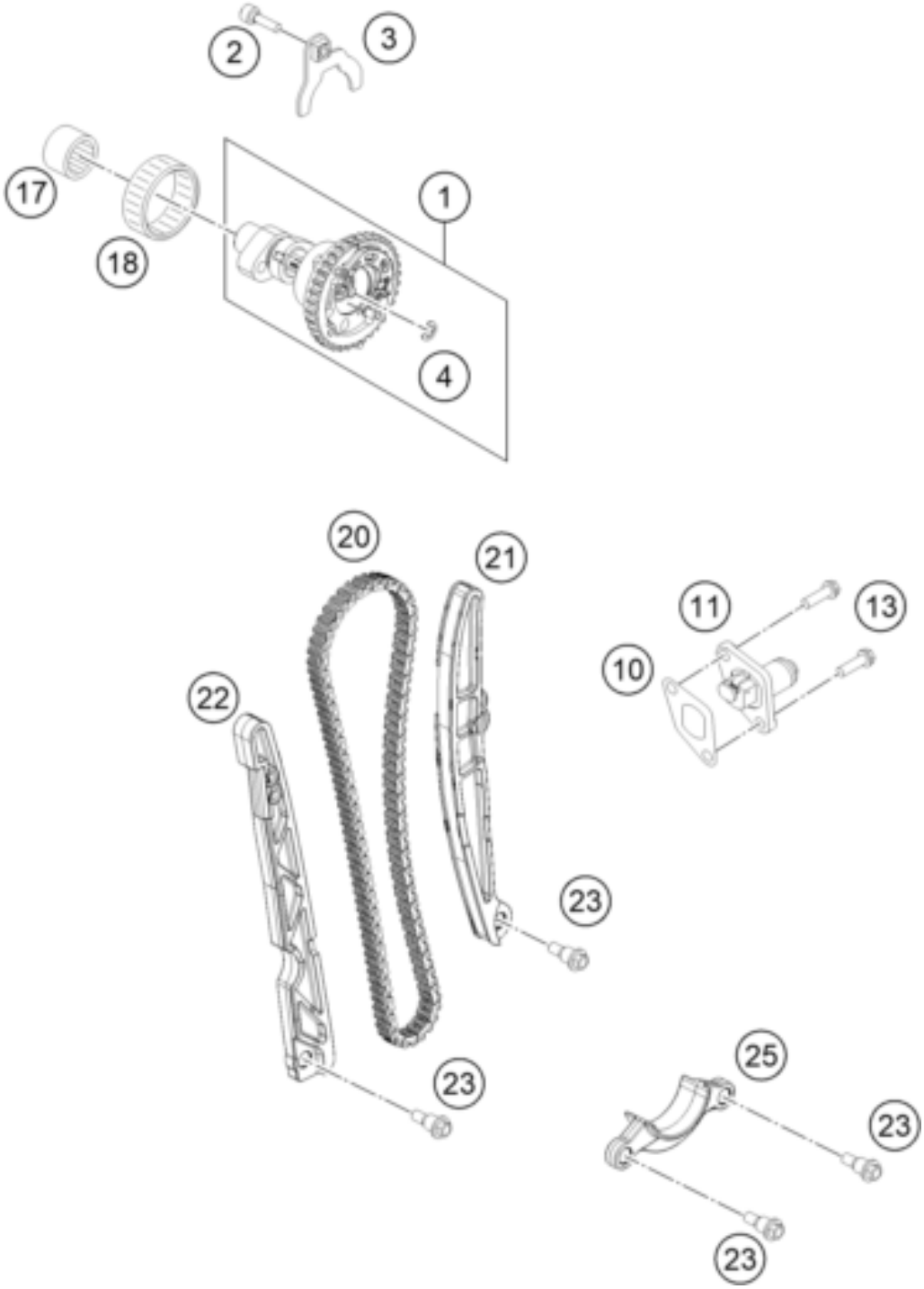

Pos	Part Number	Description	Additional Text	Quantity
1	78136010033	CAMSHAFT CPL. WITH DECO		1.00
2	0025060206S	HH collar screw M6x20 TX30		1.00
3	78036012033	RETAINING PLATE CAMSHAFT CPL.		1.00
4	0799050000	TAB WASHER DIN6799 RS5		1.00
10	59036003050	GASKET TIMING CHAIN TENSIONER		1.00
11	59036003000	TIMINGCHAIN TENSIONER CPL.RAC.		1.00
13	0025060166	HH collar screw M6x16 TX30		2.00
17	0618182414	NEEDLE SLEEVE HK1814RS18/24/14		1.00
18	0618404712	NEEDLE SLEEVE HK4012B40X47X12		1.00
20	78036013000	TIMING CHAIN 110T 08		1.00
21	78136002100	TIMING CHAIN TENSIONER		1.00

22	78136001000	TIMING CHAIN GUIDE		1.00
23	77236001160	BUSHING SCREW M6		4.00
25	78136018000	FAILURE PROTECTION		1.00