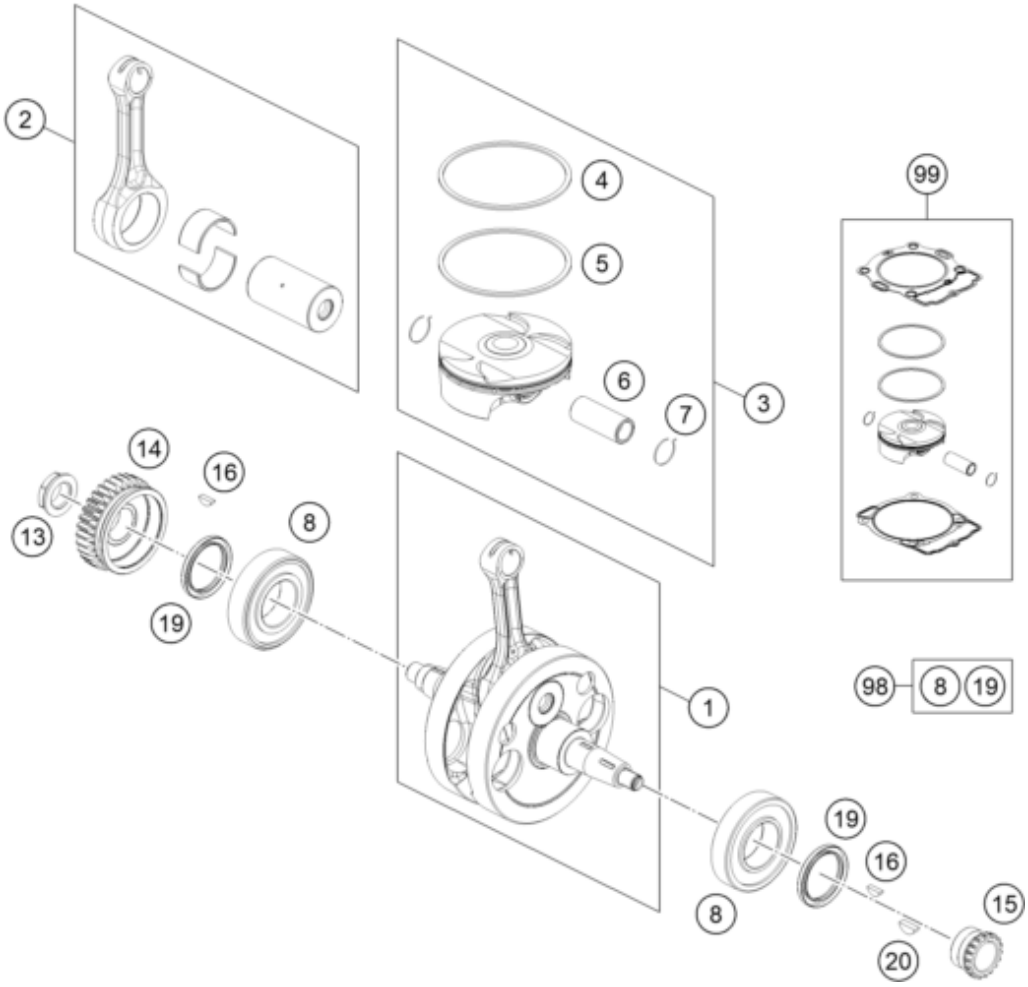

Pos	Part Number	Description	Additional Text	Quantity
1	78730218000	CRANKSHAFT CPL.		1.00
2	78730215044	CON ROD REP. KIT		1.00
3	78730007200 I	PISTON I D=95MM		1.00
3	78730007200 II	PISTON II D=95MM		1.00
4	78930030000	COMPRESSION RING		1.00
5	78930032000	OIL SCRAPER RING		1.00
6	78130033000	PISTON PIN		1.00
7	77330074000	CIRCLIP		2.00
8	0625062071	BALL BEARING 6207 TM-SX07E 39		2.00
13	78030029200	NUT PRIMARY WHEEL M20X1,5		1.00
14	78132000032	PRIMARY GEAR		1.00
15	78036014200	TIMING GEAR 18T.		1.00
16	0888030037	WOODRUFF KEY DIN6888-3X3,7		2.00
19	0760354774	SHAFT SEAL RING 35X47X7 VITON		2.00
20	0888030050	WOODRUFF KEY DIN6888-3X5X13		1.00
98	00050002308	CRANKSHAFT REP. KIT 450/500		0.00
99	00050000211	PISTON KIT GR. I 500 EXC 12-14		0.00
99	00050000212	PISTON KIT GR. II 500 EXC12-14		0.00