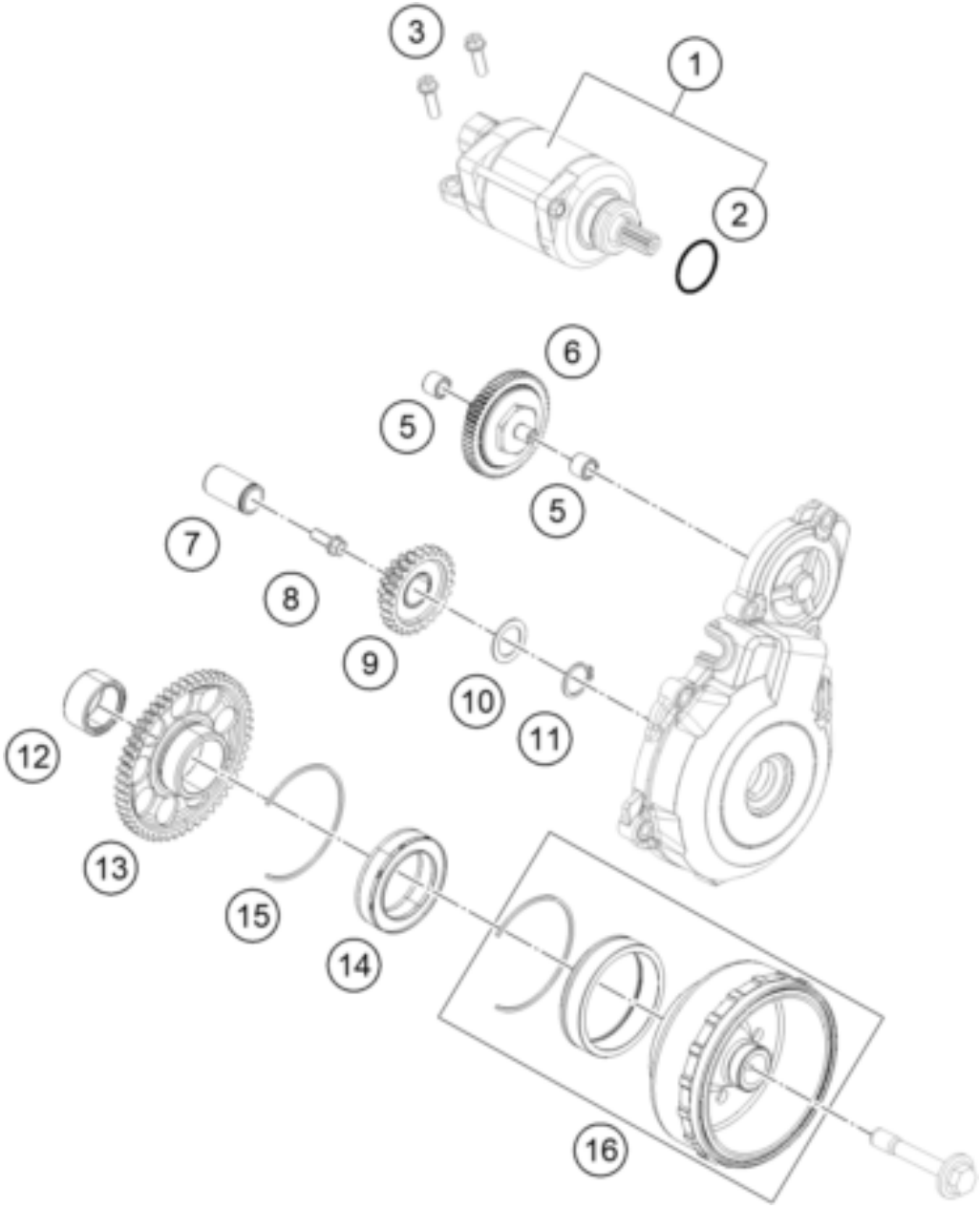

Pos	Part Number	Description	Additional Text	Quantity
1	77240001100	E-STARTER ENGINE CPL.		1.00
2	0770250030	O-RING 25,00X3,00 NBR 70		1.00
3	0025060256	HH collar screw M6x25 TX30		2.00
5	0618081210	NEEDLE BUSH HK 0810 DIN 618		2.00
6	77240116000	TORQUE LIMITER		1.00
7	59040028000	BUSHING PIN		1.00
8	0015060163	HH COLLAR SCREW M 6X16 WS=8	FE, FS	1.00
9	77240122000	STARTER INTERMEDIATE GEAR		1.00
10	54633090000	STOP DISK 17,2X25X1		1.00
11	0471170010	CIRCLIP DIN0471-17X1		1.00
12	0618253216	NEEDLE BUSH HK2516 25/32/16 02		1.00
13	77840120000	FREEWHEELER GEAR		1.00
14	80040026000	FREE WHEEL 03		1.00
15	0472057150	CIRCLIP DIN0472-57X1,50		1.00
16	77539005144	ROTOR EFI CPL.		1.00