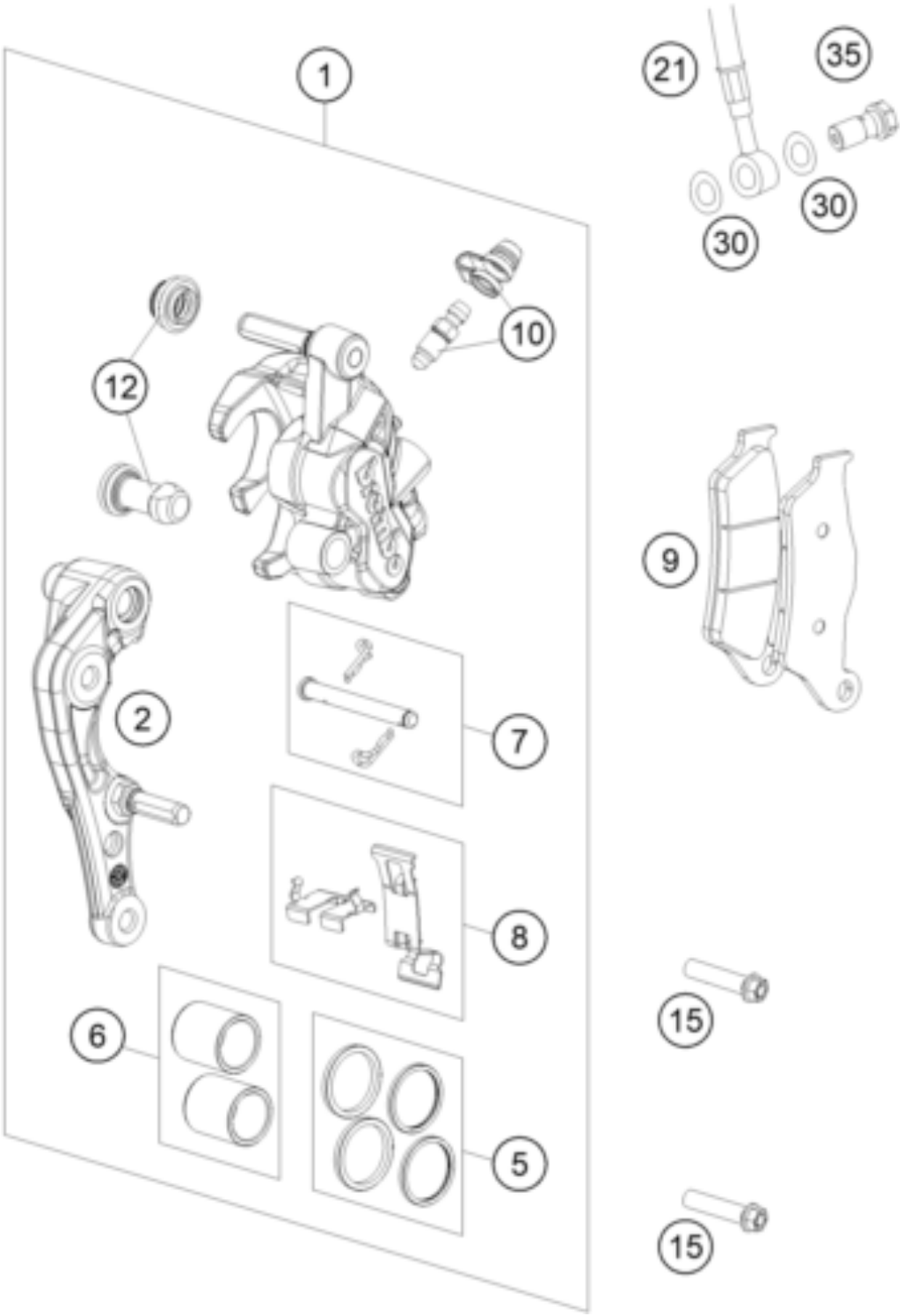

Pos	Part Number	Description	Additional Text	Quantity
1	7701301500101	CALIPER NAT. WITHOUT PADS		1.00
2	77013014000	BRAKE CALIPER SUPPORT FRONT 09		1.00
5	77013021000	REP. KIT SEALS 24MM		1.00
6	77013019000	REP. KIT PISTON 24MM		1.00
7	77013017000	BOLT CPL. 09		1.00
8	77013018000	RETAINING PLATE SET BREMBO		1.00
9	77713030000	Brake pad front		1.00
10	61013020100	BLEEDER SCREW WITH CAP		1.00
12	54613218000	CUP SET SHORT		1.00
15	0025080306S	HH COLLAR SCREW M8X30 TX40		2.00

21	77713010000	BRAKE PIPE		1.00
30	0603100141	sealing ring DIN 7603 10x14x1	ONLY FOR LC4 ADVENTURE	2.00
35	54813020100	banjo bolt M10x1x19 black	SX, EXC USA	1.00