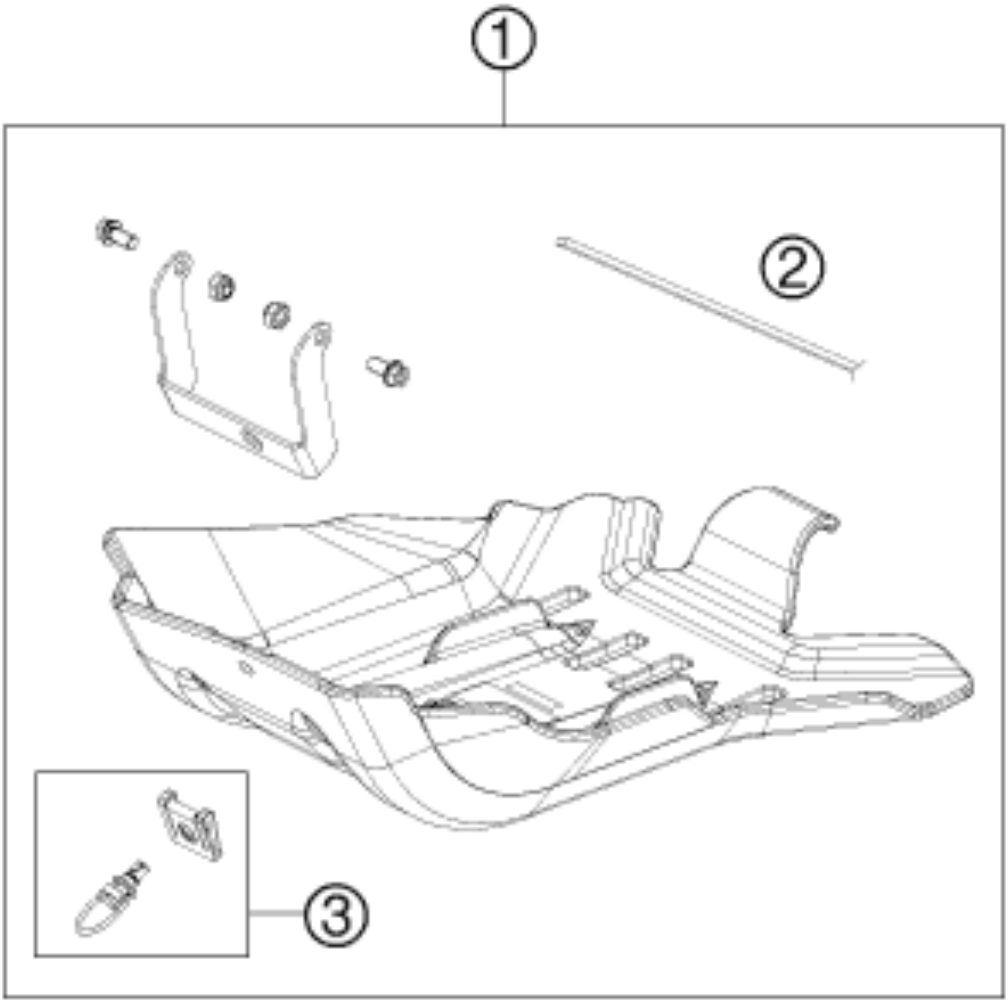

Pos	Part Number	Description	Additional Text	Quantity
1	50303190100	SKID PLATE CPL.		1.00
2	78103190030	SHIMSTRIPE 1000X11X3		1.00
3	59003090350	QUICK RELEASE 03		1.00