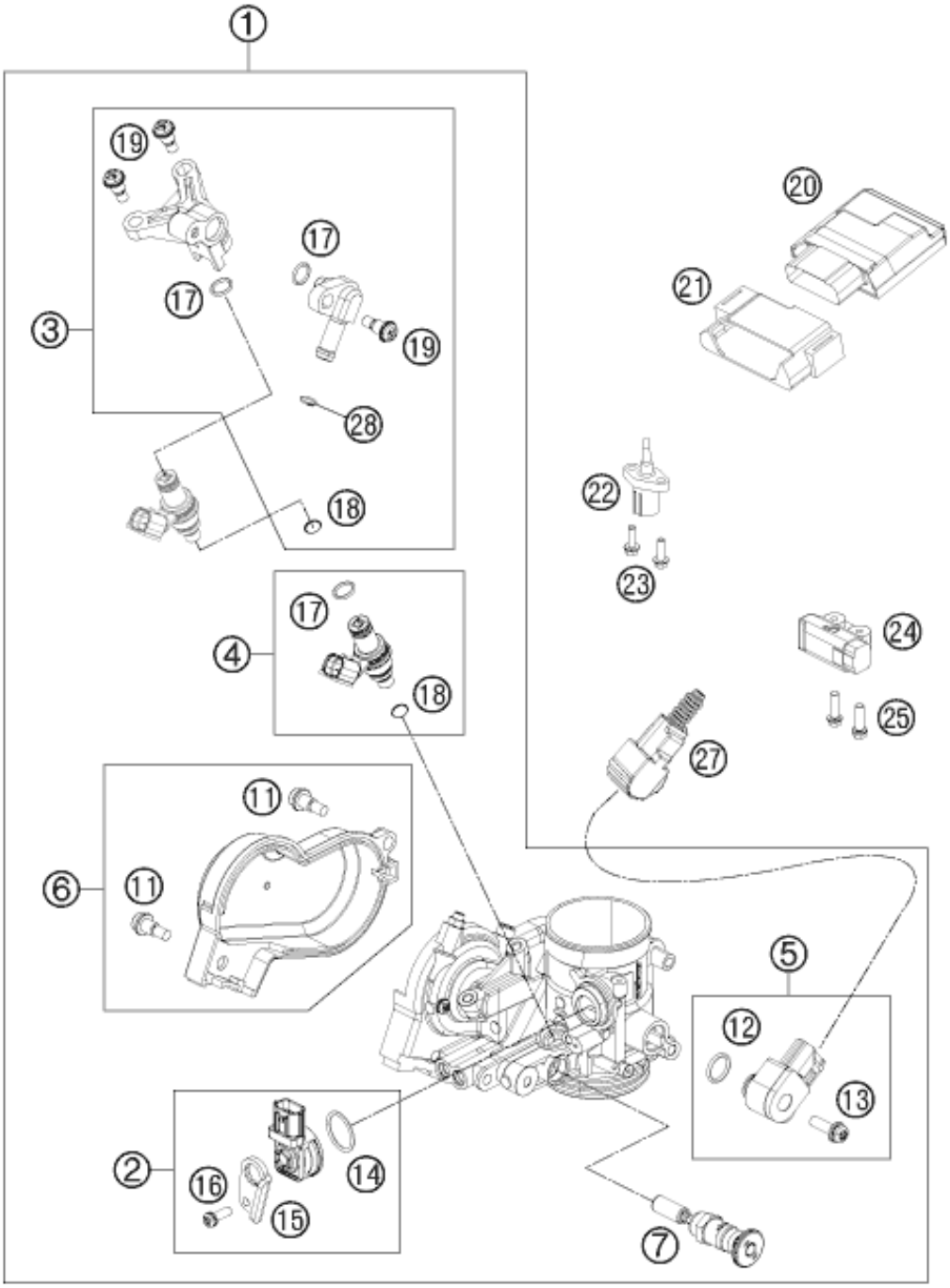

Pos	Part Number	Description	Additional Text	Quantity
1	77241001000	THROTTLE BODY		1.00
2	81241085044	MAP SENSOR CPL. 09		1.00
3	81241013044	FUEL RAIL CPL. 09		1.00
4	75041023144	INJECTOR KIT CPL.		1.00
5	81241077044	TPS KPL. 09		1.00
6	81241056044	THROTTLE COVER CPL. 09		1.00
7	81241060000	STARTER VALVE COMP.		1.00
11	81241056020	SPECIAL SCREW AH		2.00
12	61041077010	O-RING THROTTLE POS. SENSOR		1.00
13	81241077030	SPECIAL SCREW		1.00
14	75041085010	O-RING		1.00
15	81241085020	PLATE 09		1.00

16	81241085030	SPECIAL SCREW		1.00
17	75041023020	O-RING 7,2x2,2		2.00
18	75041023010	SEAL RING		1.00
19	75041013010	SCREW SHOULDER		3.00
20	81241031100	ELECTRONIC CONTROL UNIT		1.00
21	77241031050	RUBBER BRACKET ECU		1.00
22	61041080000	AMBIENT-AIR TEMPERATURE SENSOR		1.00
23	0025050166	HH collar screw M5x16 TX30		2.00
24	61041088000	ROLLOVER SENSOR 05		1.00
25	0025060206	HH collar screw M6x20 TX30		2.00
27	77111014050	PROTECTION CAP TPS		1.00
28	77507017000	CLAMP ABA 14MM		1.00