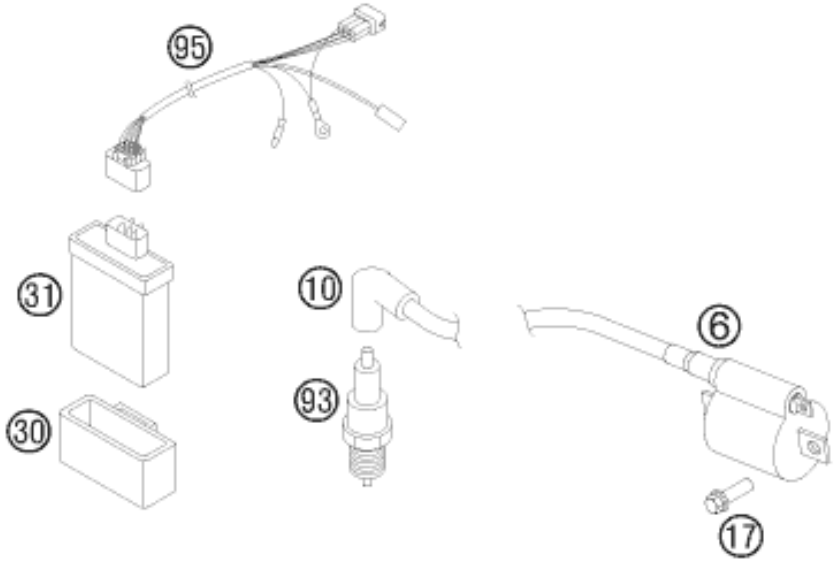

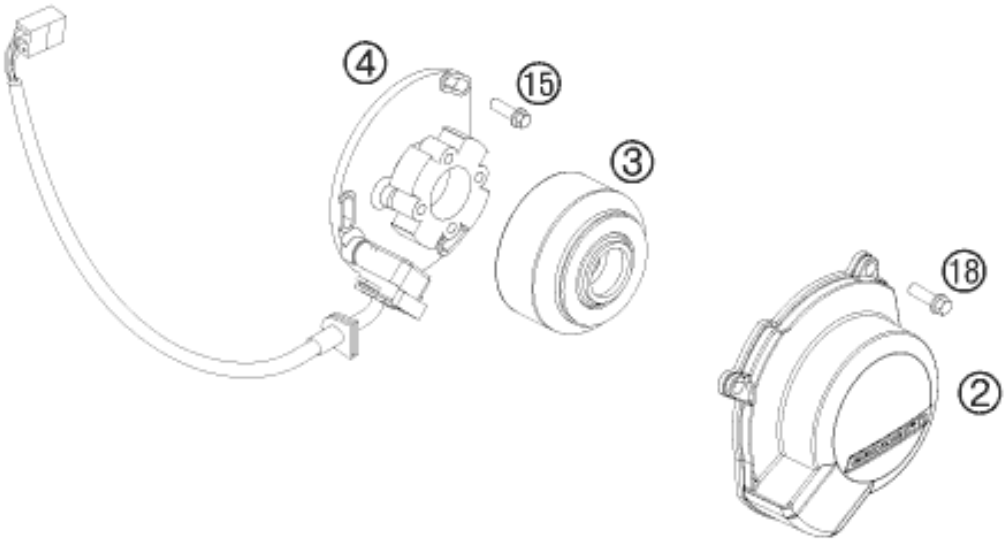

Pos	Part Number	Description	Additional Text	Quantity
2	47030002100	IGNITION COVER		1.00
3	46139005000	ROTOR 65 SX 2003		1.00
4	46139004000	STATOR 65/85 SX 2003		1.00
6	46139006100	IGNITION COIL CPL. 65 SX 2003		1.00
10	47039090000	SPARK PLUG CAP NGK REINFORC.04		1.00
15	0015050163	HH COLLAR SCREW M 5X16 WS=8		3.00
17	0015060163	HH COLLAR SCREW M 6X16 WS=8	FE, FS	2.00
18	0015060203	HH COLLAR SCREW M 6X20 WS=8		3.00
30	46139030000	RUBBER BR. DIGI.BOX 65SX 2003		1.00
31	47039031000	CDI UNIT 85 SX 2003		1.00
93	51539093000	SPARK PLUG		1.00
95	46139095000	WIRING HARNESS 65 SX 2003		1.00